Preface

PV500 special inverters are developed for power supply of water pumps, based on the core control arithmetic of FR500 vector control inverters, combined with the control requirements of PV water pump application. The function of maximum power tracking, dormant at weak light, wake up at strong light, high water level dormant, under-load pre-warning and other control protection functions can ensure normal operation of water pumps according to the customers' requirements to switch to the grid power supply.

Please refer to this manual to commission the inverter, product maintenance refer to FR500 user manual.

IMPORTANT NOTES
◆To illustrate the details of the products，pictures in this manual based on products with outer casing or safety cover being removed. When using this product, please be sure to well install outer casing or covering by the rules, and operating in accordance with the manual contents. ◆The illustrations in this manual are for illustration only and may vary with different products you have ordered. ◆The company is committed to continuous improvement of products, product features will continue to upgrade, the information provided is subject to change without notice. ◆If there is any questions when using, please contact our regional agents or our customer service center:(+86-0755-33067999) ◆For other products, please visit our website. http://www.frecon.com.cn

Contents

Preface ..... **- 1 -**

Contents ..... **- 3 -**

Chapter 1 Product Overview ..... **- 4 -**

1.1 Name Plate ..... - 4 -
1.2 Product Specifications ..... - 5 -
1.3 Dimension Drawing ..... - 9 -

Chapter 2 Commissioning Guide ..... **- 12 -**

2.1 PV Panel Power Supply Commissioning ..... - 12 -
2.2 Grid or Generator power supply wirings ..... - 13 -
2.3 Wiring diagram between FRECON VFD and single phase motor ..... - 14 -
2.4 Product Terminal Configuration ..... - 18 -

Chapter 3 Function Parameters ..... **- 21 -**

3.1 The Basic Function Parameters ..... - 21 -
3.2 H00 Group: Detailed Explanation of Function Code ..... - 49 -

Chapter 4 Troubleshooting and Countermeasures ..... **- 55 -**

Chapter 1 Product Overview

1.1 Name Plate

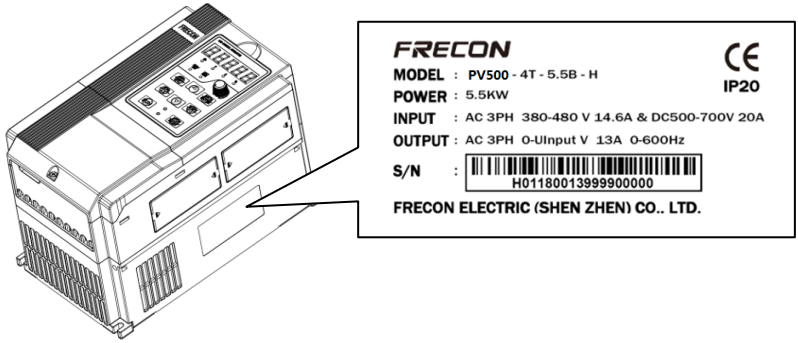

Figure 1-1 Name Plate

Model Instruction

Model numbers on name plate consist of numbers, symbols, and letters, to express its respective series, suitable power type, power level and other information.

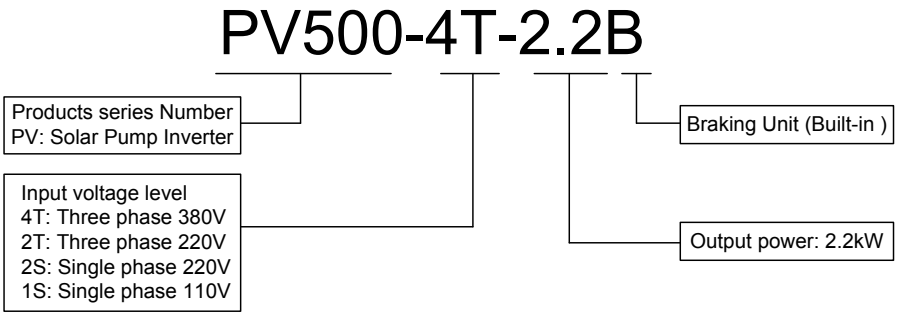

Figure 1-2 Product Model Naming Rules

1.2 Product Specifications

1.2.1 Electric specification of AC110V Input product

Table 1-1Electric specification of AC110V Input product

Model	Recommended Solar Array Power kWP	Maximum Input DC Current A	Output Current A	Adaptive Motor kW
PV150-1S-0.7B	1.1	7.5	4.2	0.18,0.2,0.25
PV150-1S-1.5B	2.25	10	7.5	0.37,0.4
PV150-1S-2.2B	3.3	18	9.5	0.75

Input specification	
PV Input	
Maximum Input DC Voltage	450VDC
Recommended Voc Range	170～300VDC
Recommended MPPT Voltage Range	140～240VDC
Starting Voltage Range	80～450VDC
Grid or backup generator input	
Input voltage	Single phase 110V(-15%～30%)
Output specification	
Rated output voltage	3PH 110V
Output frequency	0～600.00Hz（default: 0～50.00Hz）
Protection	
Built-in Protection	Lighting Protection, over-current, overvoltage, output phase-lose, under-load, under-voltage, short circuit, overheating, water pump run dry etc.

1.2.2 Electric specification of AC220 Input product

Table 1-2Electric specification of AC220 Input product

Model	Recommended Solar Array Power kWP	Maximum Input DC Current A	Output Current A	Adaptive Motor kW
PV150-2S-0.2B	0.35	2.5	1.6	0.18, 0.2, 0.25
PV150-2S-0.4B	0.6	4.5	2.5	0.37, 0.4
PV150-2S-0.7B	1.1	7.5	4.2	0.75
PV150-2S-1.5B	2.25	10	7.5	1.5

PV150-2S-2.2B	3.3	18	9.5	2.2
PV500-2T-0.7B	3.5	5.3	5	0.18, 0.2, 0.25
PV500-2T-1.5B	5.5	8.5	8	0.37, 0.4
PV500-2T-2.2B	7.5	11.6	11	2.2
PV500-2T-4.0B	11.7	18	17	4.0
PV500-2T-5.5B	17.3	26.5	25	5.5
PV500-2T-7.5B	22	33.5	32	7.5
PV500-2T-011B	31	47.5	45	11
PV500-2T-015B	41.5	63	60	15
PV500-2T-018	52	79	75	18
PV500-2T-022	63	96	91	22
PV500-2T-030	77.5	118	112	30
PV500-2T-037	104	158	150	37
PV500-2T-045	122	185	176	45
PV500-2T-055	145	221	210	55
PV500-2T-075	173	263	250	75

Input specification	
PV Input	
Maximum Input DC Voltage	450VDC
Recommended Voc Range	360～430VDC
Recommended MPPT Voltage Range	250～350VDC
Starting Voltage Range	PV150: 80～450VDC PV500: 230~450VDC
Grid or backup generator input	
Input voltage	2S: Single phase 220V(-15%～30%) 2T: Three phase 220V(-15%～30%)
Output specification	
Rated output voltage	3PH 220V

Output frequency	0～600.00Hz（default: 0～50.00Hz）
Protection	
Built-in Protection	Lighting Protection, over-current, overvoltage, output phase-lose, under-load, under-voltage, short circuit, overheating, water pump run dry etc.

1.2.3 Electric specification of AC 380V&DC 540V Input product

Table 1-3 Electric specification of AC 380V&DC 540V Input product

Model	Power Capacity kVA	Input Current A	Output Current A	Adaptive Motor kW
PV150-4T-0.7B	1.5	3.4	2.5	0.75
PV150-4T-1.5B	3	5.0	4.2	1.5
PV150-4T-2.2B	4	5.8	5.5	2.2
PV150-4T-4.0B	6	11	9.5	3.7、4
PV500-4T-0.7B	1.5	3.4	2.5	0.75
PV500-4T-1.5B	3	5.0	4.2	1.5
PV500-4T-2.2B	4	5.8	5.5	2.2
PV500-4T-4.0B	6	11	9.5	3.7、4
PV500-4T-5.5B	8.9	14.6	13	5.5
PV500-4T-7.5B	11	20.5	17	7.5
PV500-4T-011B	17	26	25	11
PV500-4T-015B	21	35	32	15
PV500-4T-018B	24	38.5	37	18.5
PV500-4T-022B	30	46.5	45	22
PV500-4T-030B	40	62	60	30
PV500-4T-037	57	76	75	37
PV500-4T-045	69	92	91	45
PV500-4T-055	85	113	112	55
PV500-4T-075	114	157	150	75
PV500-4T-090	134	160	176	90
PV500-4T-110	160	190	210	110
PV500-4T-132	192	232	253	132

PV500-4T-160	231	282	304	160
PV500-4T-185	240	326	350	185
PV500-4T-200	250	352	377	200

Input specification	
PV Input	
Maximum Input DC Voltage	800VDC
Recommended Voc Range	600～750VDC
Recommended MPPT Voltage Range	450～600VDC
Starting Voltage Range	230～800VDC
Grid or backup generator input	
Input Voltage	Three phase 380V(-15%～30%)
Output specification	
Rated output voltage	3PH 380V
Output frequency	0～600.00Hz（Default 0～50.00Hz）
Protection	
Built-in Protection	Lighting Protection, over-current, overvoltage, output phase-lose, under-load, under-voltage, short circuit, overheating, water pump run dry etc.
General Parameters	
Application Site	No direct sunshine, no dust、corrosive gas、combustible gas、oil mist、steam、dripping or salinity etc.
Altitude	0～2000 m Derated use above 1000m,per 100m, the rated output current decrease 1%.
Environment Temperature	-10℃～40℃ (Environment Temperature be 40℃～50℃, please keep derated use.)
Humidity	5～95%,non-condensation
Vibration	less than 5.9 m/s^2（0.6g）
Storage Temperature	-20℃～+70℃
Efficiency	Rated Power Run≥93%

Installation	Wall or rail mounting
Protection Grade	IP20
Cooling	Forced Air Cooling

1.3 Dimension Drawing

1.3.1 PV150

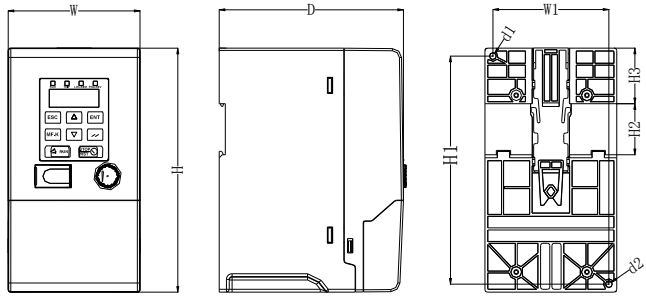

Figure 1-3 Product size chart

Table1-4 Configuration, mounting dimensions and weight

Model	External and installation dimensions (mm)									N.W (kg)
	W	H	D	W1	H1	H2	H3	Install hole d1	Install hole d2	
PV150-1S-0.7B	75	150	117	65	140	35	38.5	4.5	4.5	1.1
PV150-2S-0.2B										
PV150-2S-0.4B										
PV150-2S-0.7B										
PV150-4T-0.7B										
PV150-4T-1.5B										
PV150-1S-1.5B	93	171	130	82	160	35	39	4.5	4.5	1.5
PV150-1S-2.2B										
PV150-2S-1.5B										
PV150-2S-2.2B										
PV150-4T-2.2B										
PV150-4T-4.0B										

1.3.2 PV500

◆0.7～2.2 kW　Dimensions and wall mounting dimensions

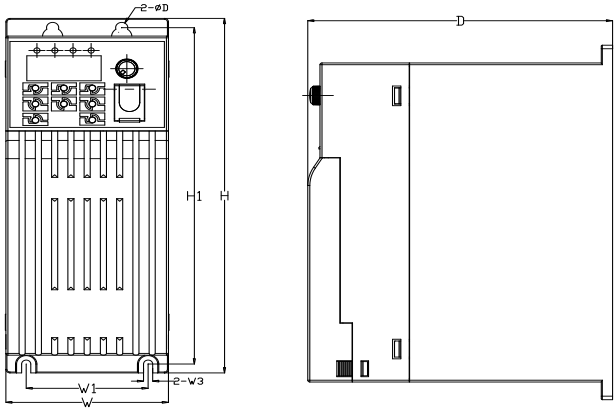

Figure 1-4 0.7～2.2 kW Wall Installation Diagram

◆4～22kW Dimensions and wall mounting dimensions

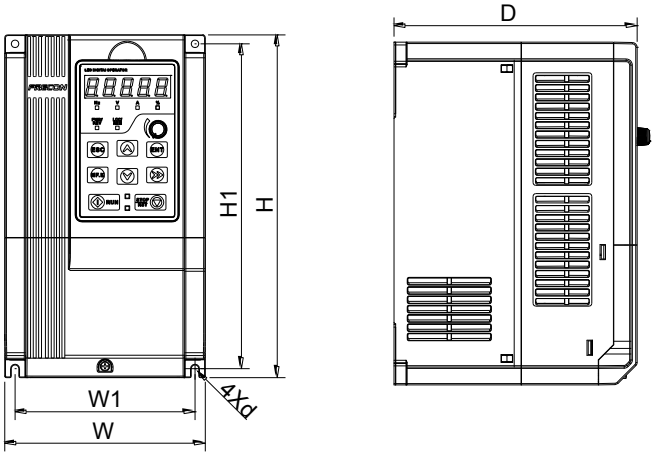

Figure 1-5 4～22kW Wall Installation Diagram

◆30～160kW Dimensions and installation dimensions

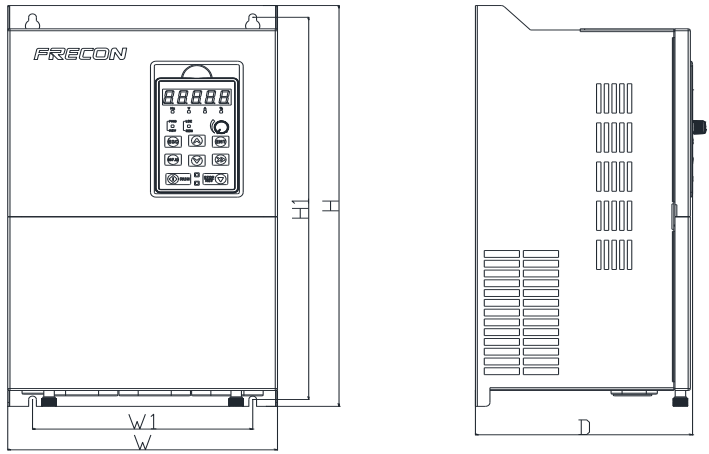

Figure 1-6 30~160kw Wall Mounting Diagram

Table 1-5 Configuration, mounting dimensions and weight

Model NO.	External and installation dimensions（mm）						Weight（Kg）
	W	W1	H	H1	D	Mounting Hole Diameter	
3-Phase:380V，50/60Hz Range:-15%～+30%							
PV500-4T-0.7B PV500-4T-1.5B PV500-4T-2.2B	80	60	200	190	150	6	1.25
PV500-4T-4.0B PV500-4T-5.5B	116.6	106.6	186.6	176.6	175	4.5	2.5
PV500-4T-7.5B PV500-4T-011B	146	131	249	236	177	5.5	3.9
PV500-4T-015B PV500-4T-018B PV500-4T-022B	198	183	300	287	185	5.5	6.2
PV500-4T-030B	245	200	410	391	200	7	11.8
PV500-4T-037B PV500-4T-045 PV500-4T-055	275	200	470	451	215	7	15
PV500-4T-075 PV500-4T-090	310	200	620	601	262	9.5	26
PV500-4T-110 PV500-4T-132 PV500-4T-160	400	300	750	724	300	11.5	68

Chapter 2 Commissioning Guide

2.1 PV Panel Power Supply Commissioning

1. Wiring drawings of below inverters shown as Figure 2-1: PV150 series, PV500 series.

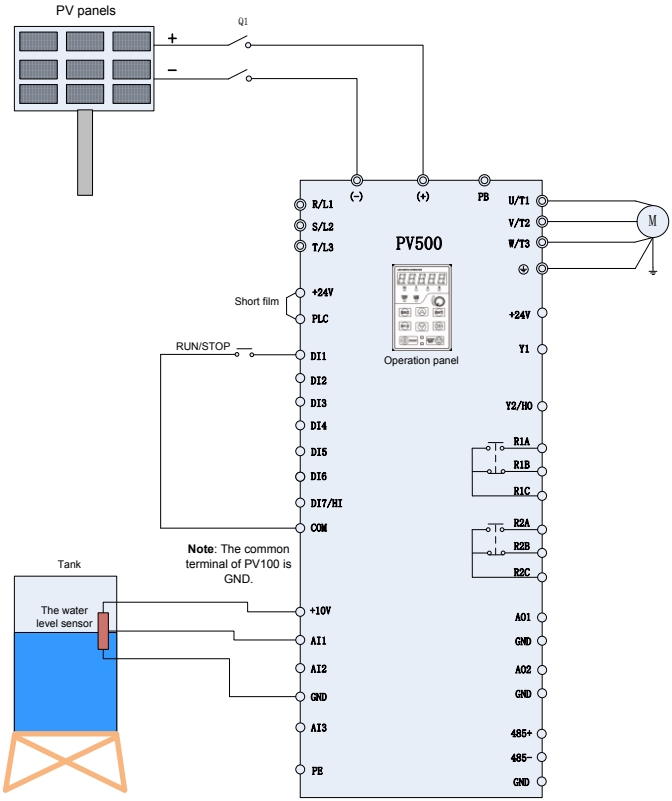

Figure 2-1 PV Cell Power Supply Wiring Diagram

1. Please wirings as Figure 2-1 according to different inverter powers, check and confirm the wirings to be correct, and then close Q1.
2. Setting the Motor Parameters

   Setting the parameter of name plate on motor F08.01～F08.05。
3. Testing the water yield of pump

   Press the operation key “RUN”, under normal circumstance of light strength, if the operation frequency low or water yield less, which means the motor wiring may be reversed, please exchange two wirings of motor.
4. System Effluent Speed PI Regulating

If the user has a high requirements for the effluent speed, PI parameters can be regulated appropriately（H00.09～H00.10）, the larger PI parameter, the stronger affection, the faster effluent, but the larger fluctuation of motor frequency; Otherwise, the slower water effluent, the more steady frequency of motor operation.

5. MPPT Tracing Speed Commissioning

H00.04 and H00.05 are respectively the lowest voltage and highest voltage under the MPPT mode, the smaller the range between them two, the faster tracing the maximum power, but the premise if that the bus voltage during normal operation must fall within this range, or the maximum power point may not be tracked. Generally speaking, the factory default value is OK.

6. Setting of fault point and fault delay reset time

If clients need to use the pre-warning of weak light, water-logged, under-load, failure monitoring point, delay time and reset time, water-logged/controlled function can be set as H00.15~H00.19 on demand; under-load function set as H00.20~H00.22; weak light function set as H00.13~H00.14. Users also can adopt the default value.

7. Parameter setting after the system operation normally

When the water yield is normal, and system run steadily, the commissioning will be finished. And then setting F02.00=1, change to terminal operation mode, setting failure auto reset times F11.27=5.

2.2 Grid or Generator power supply wirings

Wiring drawings of below inverters shown as Figure 2-2: PV150 series, PV500 series.

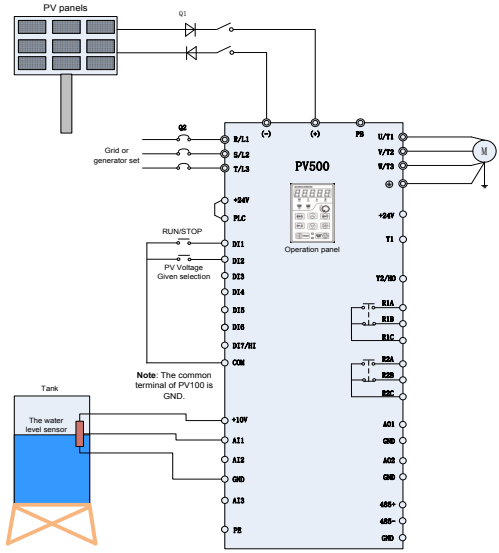

Figure 2-2 Grid or Generator Power Supply Wiring Diagram

1. Wirings as Figure 2-2 system wiring drawings according to inverters power, check and confirm the connections to be correct.

2. Disconnect the switch Q1, and then close Q2, switch to grid or diesel engine power; disconnect Q2, and then close Q1, switch to PV power supply.
3. When grid or generator power supply, setting H00.01=0, power supplied by grid.
4. For water pump's frequency, please refer to F01 group code, H00.02~H00.12 function code does not work.
5. When change to PV power supply, setting F04.1=38 and close the terminal DI2 (or setting H00.01=1).

Note:

When the bus input terminal does not install the diode protection, PV panel switch Q1 will be prohibited to close together with grid power input switch Q2, or the panel will be damaged.

2.3Wiring diagram between FRECON VFD and single phase motor

2.3.1 Single phase motor introduction

Single phase motor generally means asynchronous single phase motor powered by single phase AC 220V, there're two phase winding in motor stator and motor rotor is common squirrel cage. The distribution of two phase winding and different power supply will lead to different starting characteristics and operating characteristics

Usually single phase motor is with single capacitor or double capacitor, photos of motor are as below:

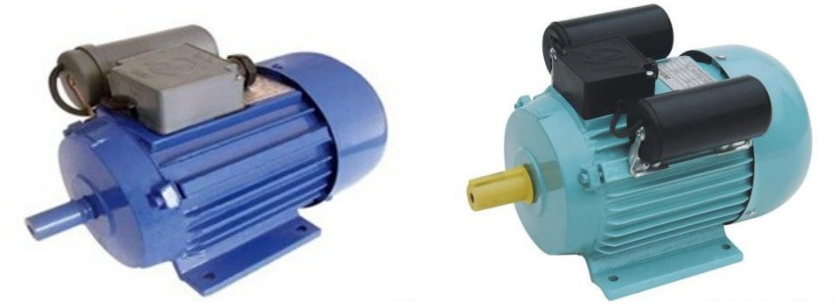

Figure 2-3 Motor with single capacitor and double capacitor

Single phase motor is consisted of main winding, secondary winding, capacitor and centrifugal switch, internal wiring of single phase motor with single capacitor is as below:

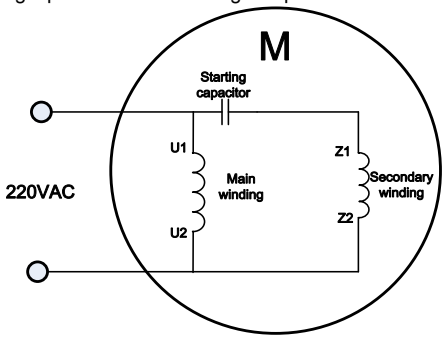

Figure 2-4 Operation mode: Internal wiring of motor with single capacitor

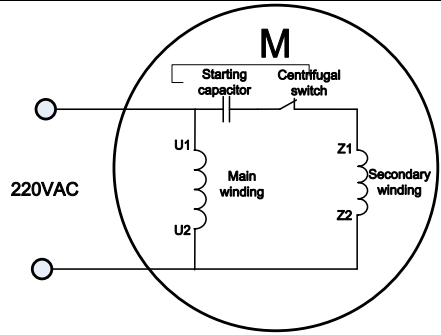

Figure 2-5 Starting mode: Internal wiring of motor with single capacitor

Internal wiring of single phase motor with double capacitors is as below:

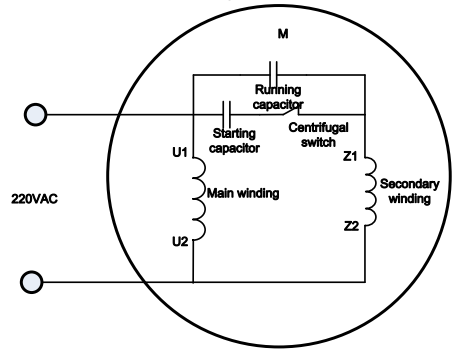

Figure 2-6 Internal wiring of motor with double capacitors

Resistor starting mode single phase motor, and internal wiring is as below:

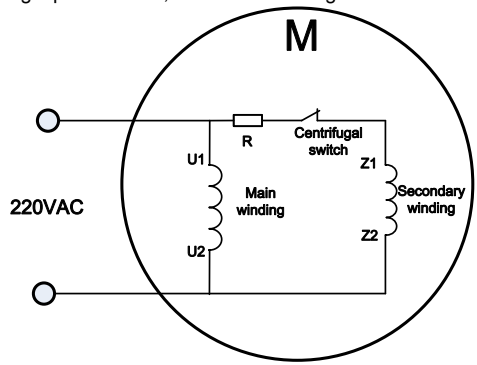

Figure 2-7 Resistor starting mode: Internal wiring of motor

We can remove capacitors from above motors, and remaining 4 main and secondary winding terminals as below:

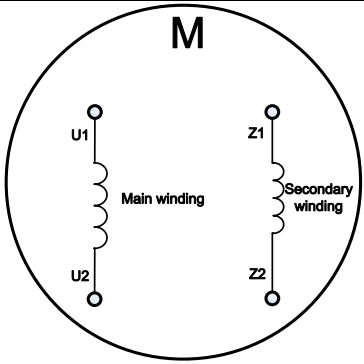

Figure 2-8 Main and secondary winding of motor

2.3.2 Wiring between VFD and motor（Capacitor removable）

Connect main and secondary winding of motor to inverter UVW, then inverter can work. But due to the motor winding difference, motor forward wiring must be as below, if not cause motor too heat

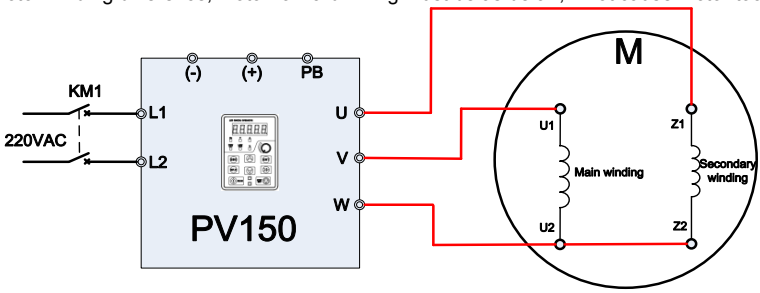

Figure 2-9 Forward wiring between PV150 VFD and motor

Motor reverse can't be completed through parameter setting of inverter or change any two phase wirings, motor reverse wiring must be as below:

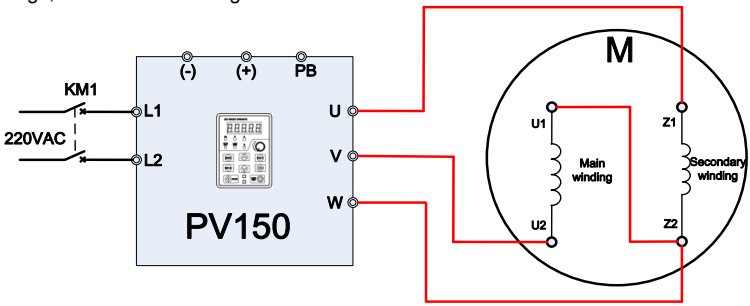

Figure 2-10 Reverse wiring between PV150 VFD and motor

Motor forward and reverse wiring of 0.75Kw/220V PV500 is same with PV150, and wiring of PV500 above 1.5kW are as below:

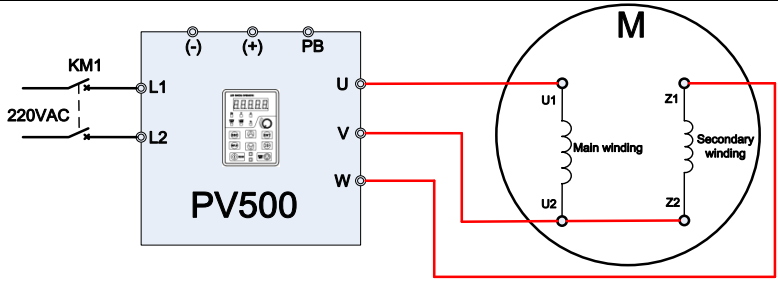

Figure 2-11 Forward wiring between VFD PV500 and motor

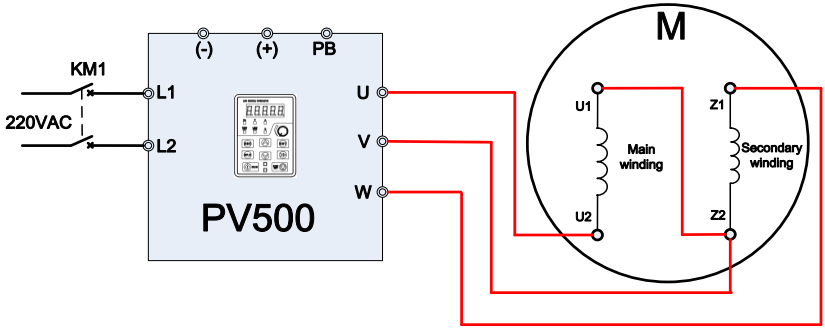

Figure 2-12 Reverse wiring between VFD PV500 and motor

Note: After wiring completed, need to set F08.00=2.

2.3.3 Wiring between VFD and motor（Capacitor is not removable）

If the capacitor in motor is not removable, the wiring is as below. The forward and reverse is determined by VW wiring sequence.

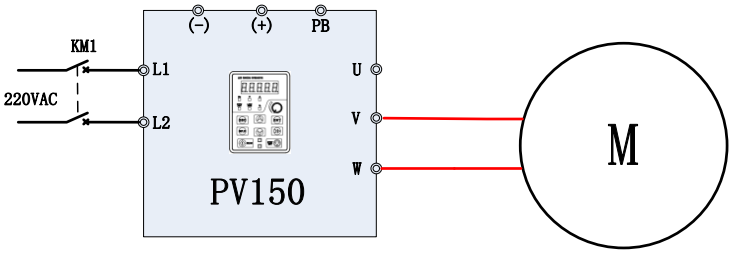

Figure 2-13 Wiring between PV150 VFD and motor

Wiring of PV500 above 220V is as below. The forward and reverse is determined by UV wiring sequence.

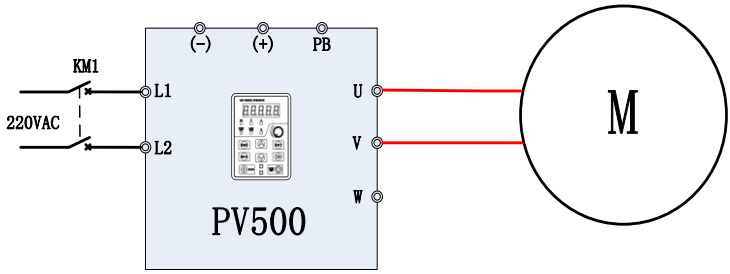

Figure 2-14 Wiring between VFD PV500 and motor

Note: After wiring completed, need to set F08.00=3

2.4 Product Terminal Configuration

2.4.1 Main Circuit Terminals

0.75～200KW main circuit terminals

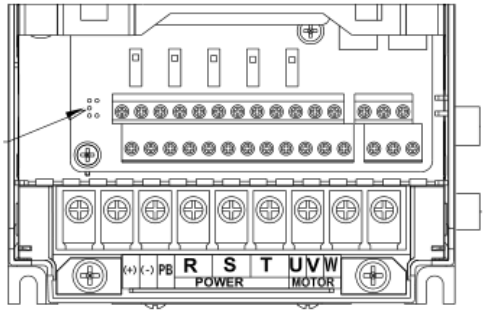

Figure 2-15 0.75～200kW Main Circuit Terminal Diagram

Table 2-1 Functions of Inverter Main Circuit Terminals

Terminal Label	Description
R、S、T	AC Power Input Terminal, connected to three-phase 380V AC power.
U、V、W	Inverter AC output terminal, connected to three-phase AC motor
(+)、(-)	Respectively to be positive and negative terminal of internal DC bus
PB	Braking resistor connection terminals, one end connected to (+), the other end of PB.
⏚	Ground terminal, connected to the earth.

2.4.2 Control Circuit Terminals

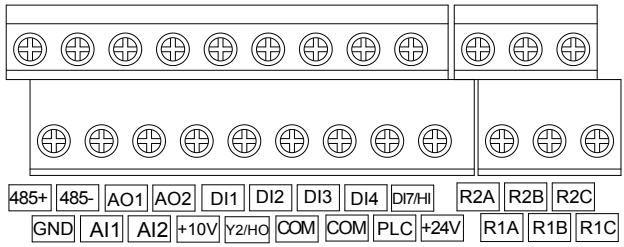

Figure 2-16 Control Terminals Diagram

Table 2-2 PV500 Inverter Control Circuit Terminal Functions

Type	Terminal Symbol	Terminal Name	Description
Power Supply	+10V-GND	＋10V Power Supply	Output +10V Power Supply, Maximum Output Current: 10mA. Generally use for power supply of external potentiometer, resistance range of potentiometer: 1～5kΩ
	+24V-COM	24V Power Supply	Output +24V power supply, generally use for power supply of digital input/output terminal and external sensor, maximum output current: 200mA.
	PLC	External Power Input Terminal	Factory default in connection with +24V, when using an external signal to drive DI1~DI7, PLC need to be connected to external power, and disconnected with +24V power terminal.
Analog Input	AI1-GND	Analog Input Terminal 1	Input Range: DC 0～10V/0～20mA, selected by AI1、AI2 toggle switches on control board. Input Impedance: 250kΩ for voltage input, 250Ω for current input.
	AI2-GND	Analog Input Terminal 2	
Digital Input	DI1- COM	Digital Input Terminal 1	Maximum input frequency: 200Hz Input Impedance: 2.4kΩ Voltage Range of level-input:9V～30V
	DI2- COM	Digital Input Terminal 2	
	DI3- COM	Digital Input Terminal 3	
	DI4- COM	Digital Input Terminal 4	
	DI7/HI-COM	Digital Input	Besides the features of DI1~DI6, DI7 also

		Terminal 7 or high-speed pulse input	can be the channel of high-speed pulse input. Maximum input frequency: 100kHz.
Analog Output	AO1-GND	Analog Output Terminal 1	Output range:DC 0～10V/0～20mA, selected by A01、A02 toggle switches on control board. Impedance required≥10kΩ
	AO2-GND	Analog Output Terminal 2	
Digital Output	Y2/HO-COM	Open Collector Output 2or high-speed pulse output	Apart from Y1 characteristics, Y2 also can be the channel of high-speed pulse input. Maximum output frequency: 100kHz.
Relay Output	R1A-R1C	normal open terminal	Contact driving ability: AC250V，3A，COSØ=0.4。 DC 30V，1A
	R1B-R1C	normal close terminal	
	R2A-R2C	normal open terminal	
	R2B-R2C	normal close terminal	
485 Communication	485+-485-	485 Communication Terminals	Speed: 4800/9600/19200/38400/57600/115200bps. RS485 toggle switch on control board, setting the terminal matching-resister
	GND	485 Communication Shield Ground	
Shielded	PE	Shield Grounding	It's use for grounding the shield of terminal-wire
Aid Interface		External Keyboard Interface	When connected to operation board, the longest communication distance is up to 50m, adopt the standard network cable (RJ45)

Note:The common termial (COM) of the PV150 series is GND.

Chapter 3 Function Parameters

3.1 The Basic Function Parameters

Table 3-1 Basic Function Parameters

Param.	Parameter Name	Setting Range	Default	Attr
Group F00: System Parameters				
F00.00	Setting of User Password	0～65535	0	×
F00.01	Display of Parameters	0: Display all parameters 1: Only display F00.00, F00.01 and user-defined parameters F17.00～F17.29 2: Only display A0-00, A0-01, and the parameters different with factory default	0	×
F00.02	Parameter Protection	0: All parameter programmable 1: Only F00.02 and this parameter programmable	0	×
F00.03	G/P type display	0: G type (constant torque load) 1: P type (variable torque load e.g. fan and pump)	0	×
F00.04	Parameter Initialization	0: No operation 1: Restore all parameters to factory default (excluding motor parameters) 2: Clear fault record 3: Back up current user parameters 4: Restore user backup parameters 5: Restore factory default(include motor parameter) 6: Power consumption zero clearing(U00.35)	0	×
F00.05	Copy of Parameters(Need an uploading and downloading module)	0: No operation 1: Upload parameter 2: Download parameter (excluding motor parameters) 3: Download parameter (including motor parameters)	0	×
F00.06	Parameter editing mode	0:Editable via keypad and RS485 1:Editable via keypad 2:Editable via RS485	0	×
F00.08	Motor 1 control mode	0: Voltage/Frequency (V/F) control 1:Sensor-less vector control 1 2: Sensor-less vector control 2	1	×
F00.09	DI7/HI input mode	0:Digital input terminal 7 1: Pulse input	0	×
F00.10	AI1\AI2\AI3 input mode	Unit's place: AI1 0: Analog input 1: Digital input Decade: AI2 (same as AI1) Hundreds place: AI3 (same as AI1)	000	×

F00.11	Y2/HO input mode	0: Digital 0utput terminal 2 1: Pulse output	0	×
F00.12	PWM optimization	Unit' place: PWM modulation mode 0: Fixed carrier 1: Random carrier 2: Derating of fixed carrier 3: Derating of random carrier Ten' place: PWM modulation mode 0: Seven-segment mode 1: Five-segment mode 2: Five-segment and seven-segment automatic switchover Hundred' place: over-modulation adjustment 0: Disabled 1: Enabled	000	×
F00.13	Carrier frequency	0.700～16.000kHz	Model defined	△
F00.14	Upper carrier frequency	0.700～16.000kHz	8.000kHz	×
F00.15	Lower carrier frequency	0.700～16.000kHz	2.000kHz	×
F00.16	Output voltage	5.0～150.0%	100.0%	×
F00.17	AVR	0: Disabled 1: Enabled 2: AVR is disabled if the DC bus voltage > the rated voltage of DC bus, and it will be enabled if the DC bus voltage≤the rated voltage of DC bus.	1	×
F00.18	Fan control	0: Run at power-on 1: Fan working during running	1	×
F00.19	Factory password	0～65535	0	×
F00.20	Inverter rated power	0.2～710.0kW	Model defined	⊙
F00.21	Inverter rated voltage	60～660V	Model defined	⊙
F00.22	Inverter rated current	0.1～1500.0A	Model defined	⊙
F00.23	Software version	0.00～655.35	Model defined	⊙
F00.24	Dealer password	0～65535	0	×
F00.25	Setting operation time	0～65535h(0: Invaild)	0h	×
Group F01: Frequency Command				
F01.00	Frequency source selection	0: Master frequency source 1: Auxiliary frequency source 2: Master +Auxiliary 3: Master - Auxiliary 4: MAX{Master, Auxiliary } 5: MIN {Master, Auxiliary } 6: AI1(Master + Auxiliary) 7: AI2(Master +Auxiliary)	0	×
F01.01	Master Frequency Command Source	0:Master digital setting (F01.02) 1: keypad potentiometer 2: Analog input AI1	1	×

		3: Communication 4: Multi-reference 5: PLC 6: Process PID output 7: X7/HI pulse input 8：AI2 9：AI3		
F01.02	Digital Setting of Master Frequency	0.00～Fmax	50.00Hz	△
F01.03	Auxiliary Frequency Command Source	0: Auxiliary digital setting (F01.04) 1: keypad potentiometer 2: Analog input AI1 3: Communication 4: Multi-reference 5: PLC 6: Process PID output 7: X7/HI pulse input 8: Analog input AI2 9: Analog input AI3	0	×
F01.04	Digital setting of auxiliary frequency	0.00～Fmax	50.00Hz	△
F01.05	Range of auxiliary frequency	0: Relative to maximum frequency 1: Relative to master frequency	0	×
F01.06	Coeff of auxiliary frequency	0.0～150.0%	100.0%	△
F01.07	Jog frequency	0.00～Fmax	5.00Hz	△
F01.08	Maximum frequency	20.00～600.00Hz	50.00Hz	×
F01.09	Upper limit frequency	Fdown～Fmax Lower limit frequency～maximum frequency	50.00Hz	×
F01.10	Lower limit frequency	0.00～Fup	0.00Hz	×
F01.11	Operation when command frequency lower than lower limit frequency	0: Run at lower limit frequency 1: Run at 0 Hz would be activated after the time delay set by F01.12	0	×
F01.12	Lower limit frequency running time	0.0～6000.0s	60.0s	×
F01.13	Up to this frequency, start frequency compensation	0.00~600.00Hz	50.00Hz	△
F01.14	Frequency compensation per 50Hz	0.00~50.00Hz	0.00Hz	△
Group F02: Start/Stop Control				
F02.00	Run command	0: Keypad control (LED off) 1: Terminal control (LED on) 2: Communication control (LED blinking)	0	×
F02.01	Running direction	0: Forward 1: Reverse	0	△
F02.02	Reverse-proof action	0: Reverse enabled 1: Reverse disabled	0	×
F02.03	Dead time between forward and reverse	0.0～6000.0s	0.0s	×
F02.04	Start mode	Unit's place: 0:Start directly 1:Rotational speed track and	0000	×

		restart Ten's digit: 0:Ungrounded short-circuit detection 1:Grounding short-circuit detection before the first starts 2:Grounding short-circuit detection before each starts Hundred's digit 0:Track from zero speed 1:Track from max frequency Thousand's:Select if Jog function takes the priority 0:Disable 1:Enable		
F02.05	Start frequency	0.00～10.00Hz	0.00Hz	×
F02.06	Startup frequency holding time	0.0～100.0s	0.0s	×
F02.07	Startup DC brakin current	0.0～150.0%	0.0%	×
F02.08	DC braking time at start	0.0～100.0s	0.0s	×
F02.09	Speed search current	0.0～180.0%	130.0%	△
F02.10	Sped search decel time	0.0～10.0s	1.0s	×
F02.11	Sped search coefficient	0.01～5.00	0.30	△
F02.12	Stop mode	0: Ramp to stop 1: Coast to stop	0	×
F02.13	Initial frequency of stop DC braking	0.01～50.00Hz	2.00Hz	×
F02.14	Stop DC braking current	0.0～150.0%	0.0%	×
F02.15	Waiting time of stop DC braking	0.0～30.0s	0.0s	×
F02.16	Stop DC braking time	0.0～30.0s	0.0s	×
F02.17	Dynamic brake	0: Disabled 1: Enabled 2: Enabled at running 3: Enabled at deceleration	0	×
F02.18	Voltage of dynamic braking	480～800V	700V	×
F02.19	Brake use ratio	5.0～100.0%	100.0%	×
F02.20	0Hz output selection	0: No voltage output 1: Voltage output	0	×
F02.21	Auto-start of power-on again	0: Invalid 1: Valid	0	△
F02.22	Waiting time between auto-start and power-on again	0.0~10.0s	0.5s	△
Group F03: Accel/Decel Parameters				
F03.00	Accel time 1	0.0～6000.0s	15.0s	△
F03.01	Decel time 1	0.0～6000.0s	15.0s	△
F03.02	Accel time 2	0.0～6000.0s	15.0s	△
F03.03	Decel time 2	0.0～6000.0s	15.0s	△
F03.04	Accel time 3	0.0～6000.0s	15.0s	△
F03.05	Decel time 3	0.0～6000.0s	15.0s	△
F03.06	Accel time 4	0.0～6000.0s	15.0s	△
F03.07	Decel time 4	0.0～6000.0s	15.0s	△

F03.08	Jog accel time	0.0～6000.0s	15.0s	△
F03.09	Jog decel time	0.0～6000.0s	15.0s	△
F03.10	Accel/Decele curve	0: Linear Accel/Decel 1: S-curve Accel/Decel	0	×
F03.11	Initial segment time of acceleration of S curve	0.0～6000.0s	0.0s	×
F03.12	Time unit of acceleration and deceleration	0: 0.1s 1: 0.01s	0	×
F03.13	Frequency switchover point between acceleration time 1 and acceleration time 2	0.00～Fmax	0.00Hz	×
F03.14	Frequency switchover point between deceleration time 1 and deceleration time 2	0.00～Fmax	0.00Hz	×
F03.15	End segment time of acceleration of S curve	0.0～6000.0s	0.0s	×
F03.16	Initial segment time of deceleration of S curve	0.0～6000.0s	0.0s	×
F03.17	End segment time of deceleration of S curve	0.0～6000.0s	0.0s	×
Group F04 Digital Input				
F04.00	Function of terminal DI1	00: No function 01: Running forward (FWD) 02: Running reverse (REV) 03: Three-wire control 04: JOG forward 05: JOG reverse 06: Coast to stop 07: Fault reset (RESET) 08: Running suspended 09: External fault input 10: Terminal UP 11: Terminal DOWN 12: UP/DOWN (including ∧/∨ key) adjustment clear 13: Multi-step frequency terminal 1 14: Multi-step frequency terminal 2 15: Multi-step frequency terminal 3 16: Multi-step frequency terminal 4 17: Accel/Decel time determinant 1 18: Accel/Decel time determinant 1 19: Accel/Decel disabled(ramp stop not inclusive) 20: Switch to auxiliary speed setting 21: PLC status reset 22: Simple PLC paused 23: Simple PLC paused 24: PID adjustment direction 25: PID integration paused 26: PID parameter switch 27: Swing frequency pause(output the currentfrequency) 28: Swing frequency reset(output	1	×
F04.01	Function of terminal DI2		2	×
F04.02	Function of terminal DI3		7	×
F04.03	Function of terminal DI4		13	×
F04.04	Function of terminal DI5		0	×
F04.05	Function of terminal DI6		0	×
F04.06	Function of terminal DI7		0	×
F04.07	Function of terminal AI1		0	×
F04.08	Function of terminal AI2		0	×
F04.09	Function of terminal AI3		0	×

		the central frequency) 29: Run command switched to keypad contro 30: Run command switched to terminal control 31: Run command switched to communication control 32: Count input 33: Count clear 34: Length count 35: Length clear 36: DC brake input command at Stop 37: Speed/torque control switch 38:No reverse 39:No forward		
F04.10	Filtering time of digital input terminal	0.000～1.000s	0.010s	△
F04.11	Delay time before terminal DI1 is valid	0.0～300.0s	0.0s	△
F04.12	Delay time before terminal DI2 is valid	0.0～300.0s	0.0s	△
F04.13	Terminal DI1～DI5 positive/negative logic	DI5、DI4、DI3、DI2、DI1 0: Positive logic(Terminals are on at 0V/off at 24V) 1: Negative Logic (Terminals are off at 0V/on at 24V)	00000	×
F04.14	Terminal DI6～AI3 positive/negative logic	AI3、AI2、AI1、DI7、DI6 0: Positive logic 1: Negative Logic	00000	×
F04.15	FWD/REV terminal control mode	0: Two-wire mode 1 1: Two-wire mode 2 2: Three-wire mode 1 3: Three-wire mode 2	0	×
F04.16	Terminal UP/DOWN frequency adjustment control	Unit's place: action when stop 0: Clear 1: Holding Decade: action on power loss 0: Clear 1: Holding Hundreds place: integral function 0: No integral function 1: Integral function enabled Thousand's place：Select if it can be reduced to negative frequency 0: Disable 1: Enable Ten thousand's place: Select if Jog action can clear UP/DOWN or not 0: Not zero-clearing 1: Zero-clearing	00001	×
F04.17	Terminal UP/DOWN frequency change step size	0.00～50.00Hz 0.00:Disabled	1.00Hz/ 200ms	△
F04.18	Terminal action selection when power on	0: Level effective 1: Edge trigger +Level effective(When power on)	0	×

		2: Edge trigger +Level effective(Every start)		
F04.19	Delay time before terminal DI1 is invalid	0.0～300.0s	0.0s	△
F04.20	Delay time before terminal DI2 is invalid	0.0～300.0s	0.0s	△
Group F05 Digital Output				
F05.00	Y1 output function	0: No output 1: Drive is running 2: Fault output 3: Frequency-level detection FDT1 output 4: Frequency-level detection FDT2 output 5: Drive in 0Hz running 1(no output at stop) 6: Drive in 0Hz running 2(output at stop) 7: Upper limit frequency attained 8: Lower limit frequency attained 9: Frequency attained 10: Inverter is ready to work 11: Drive (motor) overloaded alarm 12: Inverter overheat warning 13: Current running time attained 14: Accumulative power-on time attained 15: Consecutive running time attained 16: PLC cycle completed 17: Set count value attained 18: Designated count value attained 19: Length attained 20: Under load alarm 21:Brake output 22: DI1 23: DI2 24:When reach the range of set frequency(FDT1)	1	×
F05.01	Y2 output function		3	
F05.02	Relay 1 output function		2	×
F05.03	Relay 2 output function		11	×
F05.04	Y1 output delay time	0.0～6000.0s	0.0s	△
F05.05	Y2 output delay time	0.0～6000.0s	0.0s	△
F05.06	R1 output delay time	0.0～6000.0s	0.0s	△
F05.07	R2 output delay time	0.0～6000.0s	0.0s	△
F05.08	Enabled state of digital output	Unit's place: Y1 0: Positive logic 1: Negative logic Decade: Y2 (same as unit's place) Hundreds place: Relay 1 output (same as unit's place) Thousands place: Relay 2 output (same as unit's place)	0000	×
F05.09	Detection width of frequency attained	0.00～20.00Hz	5.00Hz	×
F05.10	FDT1 upper bound	0.00～Fmax	30.00Hz	×
F05.11	FDT1 lower bound	0.00～Fmax	30.00Hz	×
F05.12	FDT2 upper bound	0.00～Fmax	30.00Hz	×

F05.13	FDT2 lower bound	0.00～Fmax	30.00Hz	×
F05.14	Consecutive running time	0.0～6000.0Min 0.0:Disabled	0.0Min	×
F05.15	Accumulative power-on time setting	0～65535h 0:Disabled	0h	×
F05.16	Accumulative running time setting	0～65535h 0:Disabled	0h	×
F05.17	Brake control selection	0: Disabled 1: Enabled	0	×
F05.18	Brake opened frequency	Closed frequency ~30.00Hz	2.50Hz	×
F05.19	Brake opened current	0.0~200.0%	0.0%	△
F05.20	Brake open waiting time	0.00~10.00s	0.00s	×
F05.21	Brake open operating time	0.00~10.00s	0.50s	×
F05.22	Brake closed frequency	0.00Hz~opened frequency	2.00Hz	×
F05.23	Brake close waiting time	0.00~10.00s	0.00s	×
F05.24	Brake close operating time	0.00~10.00s	0.50s	×
Group F06 Analog and Pulse Input				
F06.00	Minimum input of curve AI1	0.0%～input of inflection point1 of curve AI1	1.0%	△
F06.01	Set value corresponding to minimum input of curve AI1	-100.0～100.0%	0.0%	△
F06.02	Input of inflection point 1 of curve AI1	Minimum input of curve AI1～Input of inflection point 2 of curve AI1	100.0%	△
F06.03	Set value corresponding to input of inflection point 1 of curve AI1	-100.0～100.0%	100.0%	△
F06.04	Input of inflection point 2 of curve AI1	Input of inflection point 1 of curve AI1～Maximum input of curve AI1	100.0%	△
F06.05	Set value corresponding to input of inflection point 2 of curve AI1	-100.0～100.0%	100.0%	△
F06.06	Maximum input of curve AI1	Input of inflection point 2 of curve AI1～100.0%	100.0%	△
F06.07	Set value corresponding to maximum input of curve AI1	-100.0～100.0%	100.0%	△
F06.08	Minimum input of curve AI2	0.0%～input of inflection point1 of curve AI2	1.0%	△
F06.09	Set value corresponding to minimum input of curve AI2	-100.0～100.0%	0.0%	△
F06.10	Input of inflection point 1 of curve AI2	Minimum input of curve AI1～Input of inflection point 2 of curve AI2	100.0%	△
F06.11	Set value corresponding to input of inflection point 1 of curve AI2	-100.0～100.0%	100.0%	△
F06.12	Input of inflection point 2 of curve AI2	Input of inflection point 1 of curve AI2～Maximum input of curve AI2	100.0%	△
F06.13	Set value corresponding to input of inflection point 2 of curve AI2	-100.0～100.0%	100.0%	△
F06.14	Maximum input of curve AI2	Input of inflection point A of curve AI2～100.0%	100.0%	△
F06.15	Set value corresponding	-100.0～100.0%	100.0%	△

	to maximum input of curve AI2			
F06.16	Minimum input of curve AI3	0.0%～input of inflection point1 of curve AI3	0.0%	△
F06.17	Set value corresponding to minimum input of curve AI3	-100.0～100.0%	-100.0%	△
F06.18	Input of inflection point 1 of curve AI3	Minimum input of curve AI1～Input of inflection point 2 of curve AI3	25.0%	△
F06.19	Set value corresponding to input of inflection point 1 of curve AI3	-100.0～100.0%	-50.0%	△
F06.20	Input of inflection point 2 of curve AI3	Input of inflection point 1 of curve AI3～Maximum input of curve AI3	75.0%	△
F06.21	Set value corresponding to input of inflection point 2 of curve AI3	-100.0～100.0%	25.0%	△
F06.22	Maximum input of curve AI3	Input of inflection point A of curve AI3～100.0%	100.0%	△
F06.23	Set value corresponding to maximum input of curve AI3	-100.0～100.0%	100.0%	△
F06.24	Minimum input of curve keypad potentiometer	0.0～Maximum input of curve keypad potentiometer	0.5%	△
F06.25	Set value corresponding to minimum input of curve keypad potentiometer	-100.0～100.0%	0.0%	△
F06.26	Maximum input of curve keypad potentiometer	Minimum input of curve keypad potentiometer～100.0	99.9%	△
F06.27	Set value corresponding to maximum input of curve keypad potentiometer	-100.0～100.0%	100.0%	△
F06.28	AI1 terminal filtering time	0.000～10.000s	0.100s	△
F06.29	AI2 terminal filtering time	0.000～10.000s	0.100s	△
F06.30	AI3 terminal filtering time	0.000～10.000s	0.100s	△
F06.31	Keypad potentiometer filtering time	0.000～10.000s	0.100s	△
F06.32	Minimum input of curve HI	0.00 kHz～Maximum input of curve HI	0.00kHz	△
F06.33	Set value corresponding to minimum input of curve HI	-100.0～100.0%	0.0%	△
F06.34	Maximum input of curve HI	Minimum input of curve HI～100.00kHz	50.00kHz	△
F06.35	Set value corresponding to maximum input of curve HI	-100.0～100.0%	100.0%	△
F06.36	HI terminal filtering time	0.000～10.000s	0.100s	△
Group F07 Analog and Pulse Output				
F07.00	AO1 output function	00: No output 01: Output frequency 02: Command frequency 03: Output current 04: Output voltage 05: Output power 06: Bus voltage	1	×
F07.01	AO2 output function		2	×
F07.02	Y2/HO output function (when used as HO)		3	×

		07: +10V 08: keypad potentiometer 09: AI1 10: AI2 11: AI3 12: HI 13: Output torque 14: Ao communication given 1 15: Ao communication given 2		
F07.03	AO1 offset	-100.0～100.0%	0.0%	△
F07.04	AO1 gain	-2.000～2.000	1.000	△
F07.05	AO1 filtering time	0.000～10.000s	0.000s	△
F07.06	AO2 offset	-100.0～100.0%	0.00%	△
F07.07	AO2 gain	-2.000～2.000	1.000	△
F07.08	AO2 filtering time	0.000～10.000s	0.000s	△
F07.09	HO maximum output pulse frequency	0.01～100.00kHz	50.00kHz	△
F07.10	HO output filtering time	0.000～10.000s	0.010s	△
Group F08 Parameters of Motor 1				
F08.00	Motor 1 type selection	0: Three phase asynchronous motors 1: Synchronous motors 2: Single phase asynchronous motors（Remove capacity） 3: Single phase asynchronous motors（No need to remove capacity）	0	×
F08.01	Power rating of motor 1	0.1～1000.0kW	Model defined	×
F08.02	Rated voltage of motor 1	60～660V	Model defined	×
F08.03	Rated current of motor 1	0.1～1500.0A	Model defined	×
F08.04	Rated frequency of motor 1	20.00～Fmax	Model defined	×
F08.05	Rated speed of motor 1	1～30000	Model defined	×
F08.08	Stator resistance R1 of async motor 1	0.001～65.535Ω	Model defined	×
F08.09	Rotor resistance R2 of async motor 1	0.001～65.535Ω	Model defined	×
F08.10	Leakage inductance L1 of async motor 1	0.01～655.35mH	Model defined	×
F08.11	Mutual inductance L2 of asynchronous motor 1	0.1～6553.5mH	Model defined	×
F08.12	No-load current of async motor 1	0.1～1500.0A	Model defined	×
F08.13	Field weakening coeff 1 of async motor 1	0.0～100.0	87%	×
F08.14	Field weakening coeff 2 of async motor 1	0.0～100.0	75%	×
F08.15	Field weakening coeff 3 of async motor 1	0.0～100.0	70%	×
F08.16	Stator resistance of sync motor	0.001～65.535Ω	Model defined	×
F08.17	Direct axis inductance of	0.01～655.35mH	Model	×

	sync motor		defined	
F08.18	Quadrature axis inductance of sync motor	0.01～655.35mH	Model defined	×
F08.19	Back EMF of sync motor	0～65535V	Model defined	×
F08.20	Installation angle of encoder	0.0～359.9°	0.0°	×
F08.21	Motor's pole number	0～1000	4	⊙
F08.22	Find encoder origin at begining	0: Not find 1: Find	1	×
F08.23	Encoder line Number	0～65535	1024	×
F08.24	Encoder type	0: ABZ incremental encoder 1: UVW incremental encoder 2: Rotary transformer 3: ECN1313	0	×
F08.25	ABZ incremental encoder AB phase sequence	0: Forward 1: Reserve	0	×
F08.26	Speed feedback PG disconnection detection time	0.0: No action 0.1～10.0s	0.0s	×
F08.27	Motor and encoder speed ratio	0.0001～60.000	1.000	×
F08.30	Autotuning of motor 1	0: No autotuning 1: Static autotuning of motor 2: Rotary autotuning of motor	0	×
Group F09 V/f Control Parameters of Motor 1				
F09.00	V/f curve setting	00: Linear V/f 01: Multi-stage V/f 02:1.2nd power V/F 03:1.4th power V/F 04:1.6th power V/F 05:1.8th power V/F 06: 2.0nd power V/F 07: V/F complete separation 08: V/F half separation 09: 1.2 power inverse curve V/F 10: 1.4 power inverse curve V/F 11: 1.6 power inverse curve V/F 12: 1.8 power inverse curve V/F 13: 2.0 power inverse curve V/F	0	×
F09.01	Torque boost	0.1%–30.0% 0.0% (fixed torque boost)	0.0%	△
F09.02	Cut-off frequency of torque boost	0.00～Fmax	50.00Hz	△
F09.03	Multi-point V/F frequency 1(F1)	0.00～F09.05	0.00Hz	△
F09.04	Multi-point V/F voltage 1 (V1)	0.0～100.0	5.0%	△
F09.05	Multi-point V/F frequency 2(F2)	F09.03～F09.05	5.00Hz	△
F09.06	Multi-point V/F voltage 2 (V2)	0.0～100.0	14.0%	△
F09.07	Multi-point V/F frequency 3(F3)	F09.05～F09.09	25.00Hz	△
F09.08	Multi-point V/F voltage 3 (V3)	0.0～100.0	50.0%	△

F09.09	Multi-point V/F frequency 4(F4)	F09.07～rated motor frequency	50.00Hz	△
F09.10	Multi-point V/F voltage 4 (V4)	0.0～100.0 Ue=100.0%	100.0%	△
F09.11	V/F slip compensation gain	0.0～300.0%	80.0%	△
F09.12	Stator voltagedrop compensation gain	0.0～200.0%	100.0%	△
F09.13	Excitation boost gain	0.0～200.0%	100.0%	△
F09.14	Oscillation Suppression	0.0～300.0%	100.0%	△
F09.15	Voltage source for V/F separation	0: Digital setting (F09.16) 1: keypad potentiometer 2: AI1 3: Multi-reference 4: Pulse setting (DI7/HI) 5: PID 6: AI2 7: AI3	0	×
F09.16	Voltage digital setting for V/F separation	0 V to rated motor voltage	0.0%	△
F09.17	Voltage rise time of V/F separation	0.0～6000.0s It indicates the time for the voltage rising from 0 V to rated Motor voltage.	0.1s	△
Group F10 Vector Control Parameters of Motor 1				
F10.00	Speed/torque control	0: speed control 1: torque control	0	×
F10.01	ASR low-speed proportional gain Kp1	0.0～100.0	15.0	△
F10.02	ASR low-speed integration time Ti1	0.001～30.000s	0.050s	△
F10.03	ASR switching frequency 1	0.00～F10.06	5.00Hz	△
F10.04	ASR high-speed proportional gain Kp2	1～100.0	10.0	△
F10.05	ASR high-speed integration time Ti2	0.001～30.000s	0.100s	△
F10.06	ASR switching frequency 2	F10.03～Fmax	10.00Hz	△
F10.07	ASR input filtering time	0.0～500.0ms	3.0ms	△
F10.08	ASR output filtering time	0.0～500.0ms	0.0ms	△
F10.09	Vector control slip gain	50～200%	100%	△
F10.10	Digital setting of torque upper limit in speed control mode	80.0～200.0%	165.0%	×
F10.11	Excitation adjustment proportional gain Kp1	0.00～10.00	0.50	△
F10.12	Excitation adjustment integral gain Ti1	0.0～3000.0ms	10.0ms	△
F10.13	Torque adjustment proportional gain Kp2	0.00～10.00	0.50	△
F10.14	Torque adjustment integral gain Ti2	0.0～3000.0ms	10.0ms	△
F10.15	Excitation gain coefficient	50.0~200%	100%	△
F10.16	Torque setting source under torque control	0：Set by F10.17 1：Keypad potentiometer	0	×

		2：AI1 3：AI2 4：AI3 5：Pulse setting (DI7/HI) 6：Communication setting		
F10.17	Digital setting of torque	-200.0～200.0%	50.0%	△
F10.18	Forward speed limited value under torque control	0.00～Fmax	50.00Hz	△
F10.19	Reverse speed limited value under torque contro	0.00～ Fmax	50.00Hz	△
F10.20	Set torque accel time	0.0～6000.0s	0.0s	△
F10.21	Set torque decel time	0.0～6000.0s	0.0s	△
F10.22	Static friction torque compensation	0.0～100.0%	5.00%	△
F10.23	Static friction frequency range	0.00～20.00Hz	1.00Hz	△
F10.24	Sliding friction torque compensation	0.0～100.0%	1.0%	△
F10.25	Rotary inertia compensation coeff	0.0～200.0%	30.0%	△
F10.26	Max Frequency source under torque control	0：Set by F10.18 & F10.19 1：Keypad potentiometer 2：AI1 3：AI2 4：AI3 5：Pulse setting (DI7/HI)	0	×
Group F11 Protection Parameters				
F11.00	Current limit control	0: Current limit disabled 1: Current limit mode 1 2: Current limit mode 2	2	×
F11.01	Current limit	100.0～200.0%	150.0%	×
F11.02	Frequency decreasing time(limit current in constant speed operation)	0.0～6000.0s	5.0s	△
F11.03	Current limit mode 2 proportion gain	0.1～100.0%	3.0%	△
F11.04	Current limit mode 2 integral time	0.00～10.00s	10.00s	△
F11.05	Overvoltage Stall Control	0: Overvoltage stall disabled 1: Overvoltage stall mode 1 2: Overvoltage stall mode 2	1	×
F11.06	Overvoltage stall voltage	600～800V	730V	×
F11.07	Overvoltage Stall Mode 2 Proportion Gain	0.0～100.0%	50.0%	△
F11.08	Overvoltage stall mode 2 frequency limit	0.00～50.00Hz	5.00Hz	×
F11.10	Protection action 1	Unit's place: Bus undervoltage 0: Fault reported and coast to stop 1: Stop according to the stop mode 2: Fault reported but continue to run 3: Fault protection disabled Ten's digit :Power input phase Loss (Err09)(Same as unit's place)	03330	×

		Hundred's digit :Power output phase loss(Err10)(Same as unit's place) Thousand's digit:Motor overload (Err11)(Same as unit's place) Ten thousand's digit:Inverter overload(Err11)(Same as unit's place)		
F11.11	Protection action 2	External equipment fault（Err13) 0: Fault reported and coast to stop 1: Stop according to the stop mode 2: Fault reported but continue to run Ten's digit: EEPROM read/write fault (Err15) (Same as unit's place) Hundred's digit: Communication overtime error (Err18) (Same as unit's place) Thousand's digit: PID feedback loss (Err19) (Same as unit's place) Ten thousand's digit: Continuous running time reached (Err20) (Same as unit's place)	00000	×
F11.12	Protection action 3	Unit's place: Module temperature detection disconnection（Err24) 0: Fault reported and coast to stop 1: Stop according to the stop mode 2: Fault reported but continue to run Ten's digit: Load becoming 0 (Err25) (Same as unit's place)	00030	×
F11.14	Frequency selection for continuing to run upon fault	0: Current running frequency 1: Set frequency 2: Frequency upper limit 3: Frequency lower limit 4: Backup frequency upon abnormality	1	×
F11.15	Backup frequency upon abnormality	0.00～Fmax	0.00Hz	×
F11.17	Motor overload protection time	30.0～300.0s	60.0s	×
F11.18	Overload alarm	Unit's place: detection option: 0: Always detect 1: Detect at constant speed only Ten's digit : compared object 0: Rated current of motor 1: Rated current of drive Hundred’s digit: Fault reported 0:No fault reported 1:Fault reported Thousand’s digit: whether to decelerate or not when overload alarm 0: No deceleration 1: Deceleration Ten thousand’s place: Set overload level mode	00010	×

		0:F11.19 set 1:F11.19 * VP 2:F11.19 * AI1 3:F11.19 * AI2 4:F11.19 * AI3		
F11.19	Overload alarm threshold	20.0～200.0%	130.0%	×
F11.20	Overload alarm activated time that exceeding threshold	0.1～60.0s	5.0s	×
F11.21	Inverter overheat warning threshold	50～overheat Temperature	Model defined	×
F11.22	Detection level of load loss	5.0～100.0%	20.0%	×
F11.23	Detection time of load loss	0.1～60.0s	5.0s	×
F11.24	Action selection at instantaneous power failure	0: Disabled 1: Deceleration 2: Bus voltage constant control	0	×
F11.25	Decel time at instantaneous power failure	0.0～6000.0s	5.0s	△
F11.26	Rapid current limit	0: Disabled 1: Enabled	0	×
F11.27	Times of automatic trip(fault) reset	0～20	0	×
F11.28	Interval of automatic trip(fault) reset	0.1～100.0s	1.0s	×
F11.29	DO action during fault auto reset	0: Not act 1: Act	0	×
F11.30	Instantaneous power off bus voltage	60.0%～Recovery voltage	80.0%	△
F11.31	Instantaneous power off recovery voltage	Power off voltage～100.0%	85.0%	△
F11.32	Instantaneous power off voltage detection time	0.01～10.00s	0.10s	△
F11.33	Instantaneous power off Kp	0.1～100.0%	40.0%	△
F11.34	Instantaneous power off integration time Ti	0.00～10.00s （0.00：Integration invalid）	0.10s	△
F11.35	Motor temperature sensor type	0: Disabled 1: PT100 2: PT1000	0	×
F11.36	Motor temperature sensor current source port	0: Disabled 1: AO1 2: AO2	0	×
F11.37	Motor temperature sensor input channels	0: Disabled 1: AI1 2: AI2 3: AI3	0	×
F11.38	Motor temperature warning action threshold	0～200℃	90℃	△
F11.39	Motor temperature protection action threshold	0～200℃	110℃	△
Group F12: Multi-Reference and Simple PLC Function				

F12.00	Reference 0	-100.0～100.0%	0.0%	△
F12.01	Reference 1	-100.0～100.0%	0.0%	△
F12.02	Reference 2	-100.0～100.0%	0.0%	△
F12.03	Reference 3	-100.0～100.0%	0.0%	△
F12.04	Reference 4	-100.0～100.0%	0.0%	△
F12.05	Reference 5	-100.0～100.0%	0.0%	△
F12.06	Reference 6	-100.0～100.0%	0.0%	△
F12.07	Reference 7	-100.0～100.0%	0.0%	△
F12.08	Reference 8	-100.0～100.0%	0.0%	△
F12.09	Reference 9	-100.0～100.0%	0.0%	△
F12.10	Reference 10	-100.0～100.0%	0.0%	△
F12.11	Reference 11	-100.0～100.0%	0.0%	△
F12.12	Reference 12	-100.0～100.0%	0.0%	△
F12.13	Reference 13	-100.0～100.0%	0.0%	△
F12.14	Reference 14	-100.0～100.0%	0.0%	△
F12.15	Reference 15	-100.0～100.0%	0.0%	△
F12.16	Reference 0 source	0: Digital setting（F12.00) 1: keypad potentiometer 2: AI1 3: Process PID output 4: X7/HI pulse input 5: AI2 6: AI3	0	×
F12.17	Running mode of simple PLC	Unit's place: PLC running mode 0: Stop after a single cycle 1: Continue to run with the last frequency after a single cycle 2: Repeat cycles Decade: started mode 0: Continue to run from the step of stop (or fault) 1: Run from the first step “multi-step frequency 0” 2: Run from the eighth step “multi-step frequency 8” 3: Run from the fifteenth step “multi-step frequency 15” Hundreds place:power loss memory 0: Memory disabled on power loss 1: Memory enabled on power loss Thousands place: unit of simple PLC running time 0: Second (s) 1: Minute (min)	0000	×
F12.18	Running time of step 0	0.0～6000.0s(h)	0.0s(h)	△
F12.19	Running time of step 1	0.0～6000.0s(h)	0.0s(h)	△
F12.20	Running time of step 2	0.0～6000.0s(h)	0.0s(h)	△
F12.21	Running time of step 3	0.0～6000.0s(h)	0.0s(h)	△
F12.22	Running time of step 4	0.0～6000.0s(h)	0.0s(h)	△
F12.23	Running time of step 5	0.0～6000.0s(h)	0.0s(h)	△
F12.24	Running time of step 6	0.0～6000.0s(h)	0.0s(h)	△
F12.25	Running time of step 7	0.0～6000.0s(h)	0.0s(h)	△

F12.26	Running time of step 8	0.0～6000.0s(h)	0.0s(h)	△
F12.27	Running time of step 9	0.0～6000.0s(h)	0.0s(h)	△
F12.28	Running time of step 10	0.0～6000.0s(h)	0.0s(h)	△
F12.29	Running time of step 11	0.0～6000.0s(h)	0.0s(h)	△
F12.30	Running time of step 12	0.0～6000.0s(h)	0.0s(h)	△
F12.31	Running time of step 13	0.0～6000.0s(h)	0.0s(h)	△
F12.32	Running time of step 14	0.0～6000.0s(h)	0.0s(h)	△
F12.33	Running time of step 15	0.0～6000.0s(h)	0.0s(h)	△
F12.34	Acceleration/deceleration time of simple PLC reference 0	0～3	0	△
F12.35	Acceleration/deceleration time of simple PLC reference 1	0～3	0	△
F12.36	Acceleration/deceleration time of simple PLC reference 2	0～3	0	△
F12.37	Acceleration/deceleration time of simple PLC reference 3	0～3	0	△
F12.38	Acceleration/deceleration time of simple PLC reference 4	0～3	0	△
F12.39	Acceleration/deceleration time of simple PLC reference 5	0～3	0	△
F12.40	Acceleration/deceleration time of simple PLC reference 6	0～3	0	△
F12.41	Acceleration/deceleration time of simple PLC reference 7	0～3	0	△
F12.42	Acceleration/deceleration time of simple PLC reference 8	0～3	0	△
F12.43	Acceleration/deceleration time of simple PLC reference 9	0～3	0	△
F12.44	Acceleration/deceleration time of simple PLC reference 10	0～3	0	△
F12.45	Acceleration/deceleration timeof simple PLC reference 11	0～3	0	△
F12.46	Acceleration/deceleration time of simple PLC reference 12	0～3	0	△
F12.47	Acceleration/deceleration time of simple PLC reference 13	0～3	0	△
F12.48	Acceleration/deceleration time of simple PLC reference 14	0～3	0	△
F12.49	Acceleration/deceleration time of simple PLC reference 15	0～3	0	△

F12.50	UP/DOWN function selection of Multi-reference	Unit's digit: Action selection when power off 0:Zero clearing when power off 1:Hold when power off Ten's digit: select if it can be reduced to negative 0:Disable 1:Enable	00	×
F12.51	UP/DOWN speed of Multi-reference	0.0～100.0% (0.0%Invalid)	0.0%	△
Group F13 Process PID				
F13.00	PID setting	0: F13.01 digital setting 1:keypad potentiometer 2: AI1 3: Communication 4: Multi-Reference 5: DI7/HI pulse input 6: AI2 7: AI3	0	×
F13.01	PID digital setting	0.0～100.0%	50.0%	△
F13.02	PID feedback	0: AI1 1: AI2 2: Communication 3: AI1+AI2 4: AI1-AI2 5: Max{AI1，AI2} 6: Min{AI1，AI2} 7: DI7/HI pulse input 8: AI3	0	×
F13.03	PID setting feedback range	0.0～6000.0	100.0	△
F13.04	PID action direction	0: Forward action 1: Reverse action	0	×
F13.05	Filtering time of PID setting	0.000～10.000s	0.000s	△
F13.06	Filtering time of PID feedback	0.000～10.000s	0.000s	△
F13.07	Filtering time of PID output	0.000～10.000s	0.000s	△
F13.08	Proportional gain Kp1	0.0～100.0	1.0	△
F13.09	Integration time Ti1	0.01～10.00s	0.10s	△
F13.10	Differential time Td1	0.000～10.000s	0.000s	△
F13.11	Proportional gain Kp2	0.0～100.0	1.0	△
F13.12	Integration time Ti2	0.01～10.00s	0.10s	△
F13.13	Differential time Td2	0.000～10.000s	0.000s	△
F13.14	PID parameter switch	0: No switch, determined by parameters Kp1, Ti1 and Td1 1: Auto switch on the basis of input offset 2: Switched by terminal	0	×
F13.15	PID parameter switchover deviation 1	0.0～100.0%	20.0%	×
F13.16	PID parameter switchover deviation 2	0.0～100.0%	80.0%	×
F13.17	PID offset limit	0.0～100.0%	0.0%	×

F13.18	PID integral property	Unit's digit (Whether to stop integral operation when the output reaches the limit) 0: Continue integral operation 1: Stop integral operation Ten's digit (Integral separated) 0: Invalid 1: Valid	00	×
F13.19	PID differential limit	0.0～100.0%	0.5%	×
F13.20	PID initial value	0.0～100.0%	0.0%	×
F13.21	Holding time of PID initial value	0.0～6000.0s	0.0s	×
F13.22	PID output frequency upper limit	PID output frequency lower limit～100.0%（100.0% corresponds to maximum frequency ）	100.0%	×
F13.23	PID output frequency lower limit	–100.0%～PID output frequency lower limit	0.0%	×
F13.24	Down limit of PID feedback loss	0.1～100.0% 0.0%: Not judging feedback loss	0.0%	×
F13.25	Detection time for down limit of PID feedback loss	0.0～30.0s	1.0s	×
F13.26	PID operation selection	Unit’s digit: PID operation selection when stop 0:Do not operate when stop 1:Operate when stop Ten’s digit: output is limited by output frequency 0:No limited 1:limited Hundred’s digit: UP/DOWN digital given of PID 0:Zero clearing when power off 1:Hold when power off Thousand’s place: PID feedback loss detection mode 0:No detection when stop 1:Do detection when stop Ten thousand’s place: Action when PID feedback loss 0:Report fault 1:Ramp to stop	00000	×
F13.27	UP/DWON speed of PID digital given	0.0～100.0% (0.0% Invalid)	0.0%	△
F13.28	Up limit of PID feedback loss	0.1～100.0% 0.0%: Not judging feedback loss	100.0%	×
F13.29	Detection time for up limit of PID feedback loss	0.0～30.0s	1.0s	×
Group F14: Swing Frequency, Fixed Length , Wakeup and Count				
F14.00	Swing frequency setting mode	0: Relative to the setting frequency 1: Relative to the maximum frequency	0	×
F14.01	Swing frequency amplitude	0.0～100.0%	0.0%	△

F14.02	Jump frequency amplitude	0.0～50.0%	0.0%	△
F14.03	Rising Time of Swing frequency	0.0～6000.0s	5.0s	△
F14.04	Dropping Time of Swing frequency	0.0～6000.0s	5.0s	△
F14.05	Set length	0m～65535m	1000m	×
F14.06	Number of pulses per meter	0.1～6553.5	100.0	×
F14.07	Command when the length attained	0: Not stop 1: Stop	0	×
F14.08	Set count value	1～65535	1000	×
F14.09	Designated count value	1～65535	1000	×
F14.10	Wakeup frequency	Dormant frequency (F14.12)～Fmax	0.00Hz	△
F14.11	Wakeup delay time	0.0～6000.0s	0.0s	△
F14.12	Dormant frequency	0.00～Wakeup frequency	0.00Hz	△
F14.13	Dormant delay time	0.0～6000.0s	0.0s	△
F14.14	Wake up mode selection	0: Frequency 1: Pressure	0	×
F14.15	Dormancy mode selection	0: Frequency 1: Pressure	0	×
F14.16	Voltage feedback source	Unit's place: pressure feedback channel 0: AI1 1: AI2 2: DI7/HI pulse input 3: AI3 Ten's place: Dormancy mode 0:Dormancy on high pressure and wake up on low pressure 1:Dormancy on low pressure and wake up on high pressure	00	×
F14.17	Wake up pressure	0.0%～Dormancy pressure	10.0%	△
F14.18	Dormancy pressure	Wake up pressure～100.0%	50.0%	△
Group F15: Communication Parameters				
F15.00	Baud rate	0: 4800bps 1: 9600bps 2: 19200bps 3: 38400bps 4: 57600bps 5: 115200bps	1	×
F15.01	Data format	No check, data format (1-8-N-2) for RTU 1: Even parity check, data format (1-8-E-1) for RTU 2: Odd Parity check, data format (1-8-O-1) for RTU 3: No check, data format(1-8-N-1) for RTU	0	×
F15.02	Local address	1～247 0: Broadcast address	1	×
F15.03	Communication timeout	0.0～60.0s	0.0s	×
F15.04	Response time delay	0～200ms	1ms	×
F15.05	Master-slave Communication Mode	0:The inverter is the slave 1:The inverter is the master	0	×
F15.06	The Master	0: Set frequency	0	×

	Communication Sending Data	1: Current running frequency		
F15.07	Message return when communication error	0: No return 1: Return	1	
F15.08	U group return value	0: Positive and negative 1: Absolute value	0	△
Group F16 Keys and Display of Keypad Parameters				
F16.00	MF.K key setting	0: No function 1: Jog 2: Forward/reverse switchover 3: Run command sources shifted 4: Jog reverse	1	×
F16.01	Keyboard operation display	Unit's digit: Function selection of STOP/RESET key 0: stop function of STOP/RESET key is valid only in keyboard operation mode 1: Stop function of STOP/RES key is valid in any operation mode Ten's digit: Speed display（U00.05） 0: According to the actual speed 1: Multiply frequency by speed coefficient(F16.11) Hundred's digit: Decimal places 0: No decimal places 1: One decimal places 2: Two decimal places 3: Three decimal places	001	×
F16.02	Keys locked option	0: Not locked 1: Full locked 2: Keys locked other than RUN, STOP/RST 3: Keys locked other than STOP/RST 4: Keys locked other than >>	0	×
F16.03	LED displayed parameters setting 1 on running status	0～99(correspond U00.00～U00.99)	0	△
F16.04	LED displayed parameters setting 2 on running status	0～99(correspond U00.00～U00.99)	6	△
F16.05	LED displayed parameters setting 3 on running status	0～99(correspond U00.00～U00.99)	3	△
F16.06	LED displayed parameters setting 4 on running status	0～99(correspond U00.00～U00.99)	2	△
F16.07	LED displayed parameters setting 1 on stop status	0～99(correspond U00.00～U00.99)	1	△
F16.08	LED displayed parameters setting 2 on stop status	0～99(correspond U00.00～U00.99)	6	△
F16.09	LED displayed parameters setting 3 on stop status	0～99(correspond U00.00～U00.99)	15	△
F16.10	LED displayed parameters setting 4 on stop status	0～99(correspond U00.00～U00.99)	16	△
F16.11	Speed display coefficient	0.00~100.00	1.00	△
F16.12	Power display coefficient	0.0~300.0%	100.0%	△
F16.13	Display error between	0.00Hz～5.00Hz	0.10Hz	△

	U00.00 and U00.01			
Group F17 User-defined Display Parameters				
F17.00	User-defined Display Parameter 0	00.00～49.99	00.03	△
F17.01	User-defined Display Parameter 1	00.00～49.99	01.01	△
F17.02	User-defined Display Parameter 2	00.00～49.99	01.02	△
F17.03	User-defined Display Parameter 3	00.00～49.99	01.08	△
F17.04	User-defined Display Parameter 4	00.00～49.99	01.09	△
F17.05	User-defined Display Parameter 5	00.00～49.99	02.00	△
F17.06	User-defined Display Parameter 6	00.00～49.99	02.01	△
F17.07	User-defined Display Parameter 7	00.00～49.99	02.12	△
F17.08	User-defined Display Parameter 8	00.00～49.99	03.00	△
F17.09	User-defined Display Parameter 9	00.00～49.99	03.01	△
F17.10	User-defined Display Parameter 10	00.00～49.99	04.00	△
F17.11	User-defined Display Parameter 11	00.00～49.99	04.01	△
F17.12	User-defined Display Parameter 12	00.00～49.99	04.02	△
F17.13	User-defined Display Parameter 13	00.00～49.99	04.03	△
F17.14	User-defined Display Parameter 14	00.00～49.99	05.02	△
F17.15	User-defined Display Parameter 15	00.00～49.99	08.01	△
F17.16	User-defined Display Parameter 16	00.00～49.99	08.02	△
F17.17	User-defined Display Parameter 17	00.00～49.99	08.03	△
F17.18	User-defined Display Parameter 18	00.00～49.99	08.04	△
F17.19	User-defined Display Parameter 19	00.00～49.99	08.05	△
F17.20	User-defined Display Parameter 20	00.00～49.99	08.30	△
F17.21	User-defined Display Parameter 21	00.00～49.99	11.10	△
F17.22	User-defined Display Parameter 22	00.00～49.99	13.00	△
F17.23	User-defined Display Parameter 23	00.00～49.99	13.01	△
F17.24	User-defined Display Parameter 24	00.00～49.99	13.02	△
F17.25	User-defined Display Parameter 25	00.00～49.99	13.08	△
F17.26	User-defined Display Parameter 26	00.00～49.99	13.09	△
F17.27	User-defined Display	00.00～49.99	00.00	△

	Parameter 27			
F17.28	User-defined Display Parameter 28	00.00～49.99	00.00	△
F17.29	User-defined Display Parameter 29	00.00～49.99	00.00	△
F22Group:Virtual IO				
F22.00	Function selection of virtual VDI1 terminal	The same as function code F04.00	0	×
F22.01	Function selection of virtual VDI2 terminal	The same as function code F04.00	0	×
F22.02	Function selection of virtual VDI3 terminal	The same as function code F04.00	0	×
F22.03	Function selection of virtual VDI4 terminal	The same as function code F04.00	0	×
F22.04	Function selection of virtual VDI5 terminal	The same as function code F04.00	0	×
F22.05	Valid status setting mode of virtual VDI terminals	（VDI5、VDI4、VDI3、VDI2、VDI1） 0:Validity of VDI depends on virual VDOx's status 1:Validity of VDI set by function code F22.06	00000	×
F22.06	Settings of virtual VDI terminal status	（VDI5、VDI4、VDI3、VDI2、VDI1） 0: Invalid 1: Valid	00000	△
F22.07	Function selection of virtual VDO1 terminals output	0 : Internal short circuited to physics DIx Other: The same as function code F05.00	0	△
F22.08	Function selection of virtual VDO2 terminals output	0 : Internal short circuited to physics DIx Other: The same as function code F05.00	0	△
F22.09	Function selection of virtual VDO3 terminals output	0 : Internal short circuited to physics DIx Other: The same as function code F05.00	0	△
F22.10	Function selection of virtual VDO4 terminals output	0 : Internal short circuited to physics DIx Other: The same as function code F05.00	0	△
F22.11	Function selection of virtual VDO5 terminals output	0 : Internal short circuited to physics DIx Other: The same as function code F05.00	0	△
F22.12	Virtual VDO1 output delay time	0.0s~6000.0s	0.0s	△
F22.13	Virtual VDO2 output delay time	0.0s~6000.0s	0.0s	△
F22.14	Virtual VDO3 output delay time	0.0s~6000.0s	0.0s	△
F22.15	Virtual VDO4 output delay time	0.0s~6000.0s	0.0s	△
F22.16	Virtual VDO5 output delay time	0.0s~6000.0s	0.0s	△
F22.17	VDO output terminal	VDO5、VDO4、VDO3、VDO2、VDO1	00000	△

	positive and negative logic	0: Positive logic 1: Negtive logic		
U00 Group: Status Monitoring				
U00.00	Output Frequency	0.00～Fup	0.00Hz	⊙
U00.01	Setting Frequency	0.00～Fmax	0.00Hz	⊙
U00.02	Actual value of output voltage	0～660V	0.0V	⊙
U00.03	Actual value of output current	0.0～3000.0A	0.0A	⊙
U00.04	Output Power	-3000.0～3000.0kW	0.0kW	⊙
U00.05	Output Rotation-rate	0～60000rpm	0rpm	⊙
U00.06	DC Bus Voltage	0～1200V	0V	⊙
U00.07	Synchronization Frequency	0.00～Fup	0.00Hz	⊙
U00.08	PLC Stage	1～15	1	⊙
U00.09	Program Running Time	0.0～6000.0s(h)	0.0s(h)	⊙
U00.10	PID Given	0～60000	0	⊙
U00.11	PID Arithmetic Feedback	0～60000	0	⊙
U00.12	DI1～DI5 Input Status	DI5 DI4 DI3 DI2 DI1	00000	⊙
U00.13	DI6～DI7 Input Status	DI7 DI6	00	⊙
U00.14	Digital Output Status	R2R1 Y2 Y1	0000	⊙
U00.15	AI1 Input	0.0～100.0%	0.0%	⊙
U00.16	AI2 Input	0.0～100.0%	0.0%	⊙
U00.17	AI3 Input	-100.0～100.0%	0.0%	⊙
U00.18	Keyboard Potentiometer Input	0.0～100.0%	0.0%	⊙
U00.19	HI Pulse Input Frequency	0.00～100.00kHz	0.00kHz	⊙
U00.20	A01 Output	0.0～100.0%	0.0%	⊙
U00.21	A02 Output	0.0～100.0%	0.0%	⊙
U00.22	HO Pulse Output Frequency	0.00～100.00kHz	0.00kHz	⊙
U00.23	Temperature of Inverter Module	-40.0℃～120.0℃	0.0℃	⊙
U00.24	The Power-on Time	0～65535min	0min	⊙
U00.25	The Running Time	0～6553.5min	0.0min	⊙

U00.26	Cumulative Power-on Time	0～65535h	0h	⊙
U00.27	Cumulative Running Time	0～65535h	0h	⊙
U00.28	Actual Count Value	0～65535	0	⊙
U00.29	Actual Length Value	0～65535m	0m	⊙
U00.30	Line Speed	0～65535m/min	0m/Min	⊙
U00.31	Output Torque	0.0～300.0%	0.0%	⊙
U00.35	Power consumption	0～65535KWh	0	⊙
U01 Group: Failure Record				
U01.00	Current Fault Category	Err00: No Fault	Err00	⊙
		Err01: Accelerated Over-current		
		Err02: Decelerated Over-current		
		Err03: Constant Speed Over-current		
		Err04: Accelerated Overvoltage		
		Err05: Decelerated Overvoltage		
		Err06: Constant Speed Overvoltage		
		Err07: Bus Under voltage Protection		
		Err08: Short Circuit Protection		
		Err09: Input Open Phase		
		Err10: Output Open Phase		
		Err11: Motor Overload		
		Err12: Inverter Overload		
		Err13: Fault protection of external input		
		Err14: Overheat		
		Err15: Memory Failure		
		Err16: Cancel Auto-tuning		
		Err17: Auto-tuning Failure		
		Err18: 485 Communication Timeout		
		Err19: PID feedback disconnection on runtime		
		Err20: running time arrives		

		Err21: Parameter Upload Error		
		Err22: Parameter Download Error		
		Err23: Braking Unit Failure		
		Err24: Disconnection fault of temperature sensor		
		Err25: Lose-load failure/alarm of Inverter		
		Err26: with-wave current limit fault		
		Err27: Soft-start relay unclosed		
		Err28: EEPROM Version Incompatible		
		Err29: Over-current tested by hardware		
		Err30: Overvoltage tested by hardware		
		Err32:Hydraulic Probe Failure		
		Arn33:Pre-warning of weak light		
		Arn34:Pre-warning of full-water		
U01.01	Output frequency of the current fault	0.00～Fup	0.00Hz	⊙
U01.02	Output current of the current fault	0.0～3000.0A	0.0A	⊙
U01.03	c of the current fault	0～1200V	0V	⊙
U01.04	Cumulative runtime of the current fault	0～65535h	0h	⊙
U01.05	Former one fault category	Like the latest one fault record	Err00	⊙
U01.06	Output frequency of the former one fault	0.00～Fup	0.00Hz	⊙
U01.07	Output current of the former one fault	0.0～3000.0A	0.0A	⊙
U01.08	Bus Voltage of the former one fault	0～1200V	0V	⊙
U01.09	Cumulative runtime of the former one fault	0～65535h	0h	⊙

U01.10	Former two fault categories	Like the latest one fault record	Err00	⊙
U01.11	Output frequency of the former two faults	0.00～Fup	0.00Hz	⊙
U01.12	Output current of the former two faults	0.0～3000.0A	0.0A	⊙
U01.13	Bus Voltage of the former two faults	0～1200V	0V	⊙
U01.14	Cumulative runtime of the former two faults	0～65535h	0h	⊙
U01.15	Previous 3 categories of faults	The same with U01.00	Err00	⊙
U01.16	Previous 4 categories of faults	The same with U01.00	Err00	⊙
U01.17	Previous 5 categories of faults	The same with U01.00	Err00	⊙
U01.18	Previous 6 categories of faults	The same with U01.00	Err00	⊙
U01.19	Previous 7 categories of faults	The same with U01.00	Err00	⊙
U01.20	Previous 8 categories of faults	The same with U01.00	Err00	⊙
U01.21	Previous 9 categories of faults	The same with U01.00	Err00	⊙
H00 Group: PV Pump Special Set				
H00.00	Pump Machine Control	0:Null 1:Valid	1	×
H00.01	Selection of Inverter Power	0:Mains 1:Solar Panel	1	×
H00.02	Vmpp Selection of Voltage Given Mode	0:CVT（Constant Voltage appr Given） 1:Tracking of Max Power Point（MPPT） 2:Automatic MPPT 3:Fast MPPT	2	×
H00.03	Vmpp voltage CVT setting	0～750V	540V	△
H00.04	Mini voltage reference of MPPT	0～Max Voltage	500V	×
H00.05	Max voltage reference of MPPT	Max Voltage～750V	600V	×
H00.06	PID Filter Time Given	0.000～10.000s	0.000s	△

H00.07	PID Filter Time Feedback	0.000～10.000s	0.000s	△
H00.08	PID Filter Time Output	0.000～10.000s	0.000s	△
H00.09	Ratio Gain Kp1	0.00～100.00	0.10	△
H00.10	Points Time KI	0.00～100.00	0.10	△
H00.11	PID Upper Limit of Output Frequency	PID Lower Limit of Output Frequency～100.0%（100.0% corresponds to the max frequency）	100.0 %	×
H00.12	PID Lower Limit of Output Frequency	0.0%～PID Upper Limit of Output Frequency	20.0%	×
H00.13	Dormant Delay Time of Weak light Pre-warning	0.0～6000.0s	600.0s	△
H00.14	Wake-up Delay Time of Weak Light	0.0～6000.0s	100.0s	△
H00.15	Feedback Channel Selection of Reservoir Water Level	0:Null 1:AI1 2:AI2 3:AI3	0	×
H00.16	Clean up the delay time of full-water pre-warning	0～10000s	600s	△
H00.17	Threshold of reservoir water level	0.0～100.0	25.0%	△
H00.18	Dormant Delay Time of Overtank Pre-warning	0～10000s	60s	△
H00.19	Detection of reservoir hydraulic probe	0.0～100.0	100.0 %	△
H00.20	Pre-warning delay time of pump under-load	0.0～1000.0s	60.0s	△
H00.21	Pre-warning current level of pump under-load	0.0～100.0% 0.0:Null	0.0%	△
H00.22	Reset delay time of pump under-load	0.0～1000.0s	60.0s	△
H00.23	Threshold of lag-frequency	0.00～200.00Hz	0.30Hz	△

H00.24	Water level direction detection	0:Positive direction，higher detection value higher water level 1:Negative position，higher detection value lower water level	1	×
H00.25	Weak light voltage	80V～MPPT minimum voltage(220V inverter) 230V～MPPT minimum voltage(380V inverter)	80V 230V	×
H00.26	Frequency given mode	0: Maximum frequency 1: Master frequency given mode	0	×
H00.27	Power automatic switch function	0:disable 1:Enable	0	×
H00.28	Time of automatic switch to solar power	1～600Min	60Min	△
H00.29	Automatic switch delay	0.1～10.0s	3.0s	△
H00.30	Current power source in automatic switch function	0: Grid power 1: Solar power	0	⊙
H00.31	Pump rated flow Q_N	0.0～1000.0 m3/h	6.0 m3/h	△
H00.32	Pump rated head H_N	0.0～500.0m	24m	△
H00.33	Pump cumulative flow zero clearing	0: Invalid 1: Valid	0	△
H00.34	Pump current flow	$Q = Q_N * f / f_N$ (m3/h)	0.0 m3/h	⊙
H00.35	Pump current head	$H = 0.9H_N * (f / f_N)^2$ (m)	0.0 m	⊙
H00.36	Pump cumulative flow	Unit: m3	0 m3	⊙

3.2 H00 Group: Detailed Explanation of Function Code

H00.00	Control of PV Pump Inverter	0:Null 1:Valid	1	×

0:Null

For standard model

1:Valid

For PV pumps special inverter，H00 Group: Invalid

H00.01	Selection of inverter power supply	0:Mains 1:PV Panels	1	×

0:Mains

Inverter power supply through the grid, frequency given refer to group of F01, HOO.02～H00.12 invalid.

1:PV Panels

Inverter power supply through solar panels, frequency given mainly through tracking and adjusting the max power-point PI of solar panels to get.For more details, please refer to H00.02～H00.12.

H00.02	Vmpp selection of power given mode	0:CVT（Constant Voltage appr Given）	2	×
		1:Max Power Point Tracking（MPPT）		
		2:Automatic MPPT		
		3:Fast MPPT		

0:CVT（Constant Voltage appr Given）

Adopt voltage given mode; reference voltage is a fixed value, given by H00.03.

1:Max power point tracking（MPPT）

Using max power point tracking the given reference voltage, the reference voltage will not stop changing until the system stable，the maximum power point of this searching mode is limited by range of H00.04 and H00.05

2:Automatic MPPT

System track the maximum power point automatically, adaptive to different solar panel, can track and get maximum power point rapidly.

3:Fast MPPT

System fast track the maximum power point automatically, adaptive to different solar panel, can track and get maximum power point rapidly.

No matter which reference voltage mode adopted, when bus voltage higher than reference voltage, the target frequency will change to upper limit of PI output frequency; when bus voltage lower than reference voltage, target frequency will change to lower limit of PI output frequency.

H00.03	Vmpp voltage CVT setting	0～750V	540V	△

When H00.02 is zero, reference voltage will be given by this function code.

H00.04	MPPT mini voltage reference	0～Max Voltage	500V	×
H00.05	MPPT max voltage reference	Max Voltage～750V	600V	×

When H00.03 is 1, MPPT voltage will track within H00.04~H00.05, H00.05 must be larger than H00.04, the smaller the difference between them, the narrower the tracking range, tracking will be faster. But the voltage point of max power must fall in this range.

H00.06	PID Given Filter Time	0.000～10.000s	0.000s	△
H00.07	PID Response Filter Time	0.000～10.000s	0.000s	△
H00.08	PID Output Filter Time	0.000～10.000s	0.000s	△

H00.09	Ratio Gain Kp1	0.00～100.00	0.10	△
H00.10	Points Time KI	0.00～100.00	0.10	△
H00.11	PID Upper limit of output frequency	PID Lower limit of output frequency～100.0%（100.0% corresponds to the max frequency）	100.0%	×
H00.12	PID Lower limit of output frequency	0.0%～PID Upper limit of output frequency	20.0%	×

Refer to F13 group of PID function description in FR500 user manual.

H00.13	Delay time of weak light pre-warning sleep	0.0～6000.0s	600.0s	△
H00.14	Delay time of weak light wake-up	0.0～6000.0s	100.0s	△

When the output frequency less than or equal with the lower limit of PI output frequency (H00.12), delaying timing begins, continuing this state until delay time of weak light pre-warning (H00.13) arrives, weak-light pre-warning reported (Arn33), and start dormant.

In weak light pre-warning, when output frequency larger than lower limit of PI output frequency, delaying timing begins, and continue this status until arrival delay time （H00.14）of wake-up at weak light, clean the weak light pre-warning, re-enter the running status.

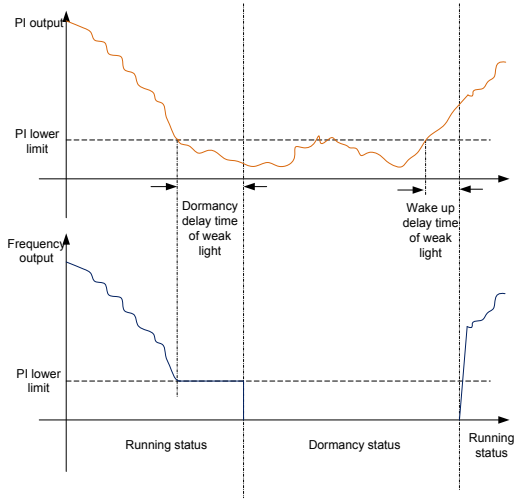

Figure 3-1 Weak light dormancy & wake up

H00.15	Feedback channel selection of reservoir water level	0:Null	0	×
		1:AI1		
		2:AI2		

		3:AI3		

0:Null

Control of water level is invalid.

1:AI1

AI1 for analog signal source of water-level control

2:AI2

AI2 for analog signal source of water-level control

3:AI3

AI3 for analog signal source of water-level control

H00.16	Clean up the delay time of overtank pre-warning	0～10000s	600s	△
H00.17	Reservoir full of water control	0.0～100.0	25.0%	△
H00.18	Dormancy delay time of reservoir full of water pre-warning	0～10000s	60s	△

When the detected water level control analog signal less than water level threshold (H00.17), and continue this status over the delay time of H00.18, reporting the pre-warning of water-full (Arn34), and dormancy.

In water-full pre-warning, when the detected water level control analog signal larger than H00.17, delay timer begins, and continue this status over the delay time of H00.16, clear the full-water pre-warning, recover the normal operation.

H00.19	Detection of reservoir hydraulic probe	0.0～100.0	100.0%	△

0.0% means Null.

When not 0.0%, when the detected water level control analog signal larger than H00.19 hydraulic probe damaged point, hydraulic probe fault (Err32) will be reported directly, and stopped.

H00.20	Current level of pump under-load pre-warning.	0.0～100.0% 0.0: Null	0.0%	△
H00.21	Delay time of pump under-load pre-warning.	0.0～1000.0s	60.0s	△
H00.22	Delay time of pump under-load resetting.	0.0～1000.0s	60.0s	△

0.0%: invalid. When not 0.0%, decided by H00.20 parameter setting, 100% correspondence to ratted current of motor.

When absolute value of the difference between target frequency and slop frequency continues less than or equal with H00.23 lag frequency threshold, if the current value continues less than H00.20 set value, over the H00.21 pump under-load delay time, reporting under-load pre-warning(Arn25).

In under-load pre-warning, delay H00.22 under-load reset time, under-load pre-warning restoration.

H00.23	Lag frequency threshold	0.00～200.00Hz	0.30Hz	△

Use for adjusting the condition of under-load operation. When absolute value of the difference between target frequency and slop frequency continues less than or equal with lag frequency threshold, current comparison will be required.

H00.24	Water level direction detection	0:Positive direction，higher detection value higher water level 1:Negative position，higher detection value lower water level	1	×

To set the relationship between hydraulic probe detected signal and water level

0: Positive direction, higher detection value higher water level

1: Negative position, higher detection value lower water level

H00.25	Weak light voltage	230V～MPPT minimum voltage	230V	×

For inverters with 380V, range: 250V～MPPT minimum voltage Default Value:230V

For inverters with 220V, range: 120V～MPPT minimum voltage Default Value:80V

When bus voltage is lower than the value of weak light voltage, inverter will soon entry the statue of weak light.

H00.26	Frequency given mode	0: Maximum frequency 1: Master frequency given mode	0	×

0:Maximum frequency

Given frequency is the maximum frequency adjusted by MPPT function

1:Master frequency given mode

In frequency range adjusted by MPPT function, given frequency is adjusted by F01.01

H00.27	Power automatic switch function	0:disable 1:Enable	0	×
H00.28	Time of automatic switch to solar power	1～600Min	60Min	△
H00.29	Automatic switch delay	0.1～10.0s	3.0s	△
H00.30	Current power source in automatic switch function	0: Grid power 1: Solar power	0	⊙

When H00.27=1 power automatic switch function is enable, grid power and solar power will be switched automatically in system. When system works with grid power, MPPT function is invalid, speed adjusted by frequency given mode, when running time is over setting time of H00.28, system will stop and switch to solar power then restart. When system works with solar power, MPPT function is valid, when system is under weak light, system will stop and switch to grid power than restart. In

every automatic switch, system will stop during the time setting by H00.29 for the switch.

H00.30 shows current power source in automatic switch, wiring as below:

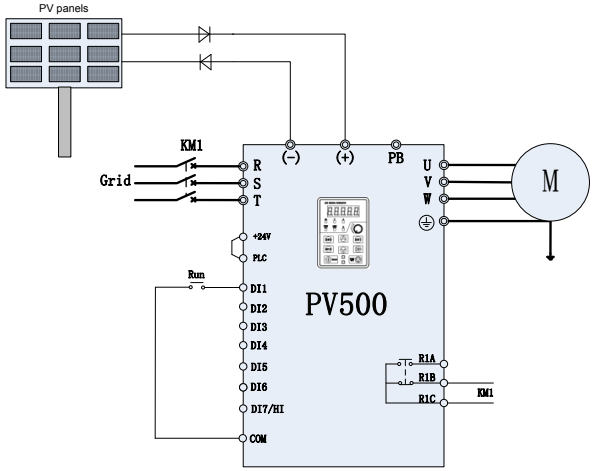

Figure 3-2 Automatic switch between grid and solar power wiring

H00.31	Pump rated flow Q_N	0.0～1000.0 m3/h	6.0 m3/h	△
H00.32	Pump rated head H_N	0.0～500.0m	24m	△
H00.33	Pump cumulative flow zero clearing	0: Invalid 1: Valid	0	△
H00.34	Pump current flow	$Q = Q_N * f / f_N$ (m3/h)	0.0 m3/h	⊙
H00.35	Pump current head	$H = 0.9H_N *(f / f_N)^2$ (m)	0.0 m	⊙
H00.36	Pump cumulative flow	Unit: m3	0 m3	⊙

This group parameter is used to estimate the pump flow and head during operation. To set pump rated flow (H00.31) and pump rated head (H00.32), inverter will automatically estimate the pump current flow and current head according to the operation state, and pump cumulative flow (H00.36) will be recorded. Parameter H00.33 is the function of pump cumulative flow zero clearing and recalculate.

Chapter 4 Troubleshooting and Countermeasures

PV500 inverters supply many kinds of warning information and protection functions, when failure occurred, function of protection actives, inverters will stop output, fault relay contact of inverter active, and display the fault code on inverter operation panel. Before asking support, users can self-check according to this chapter tips, and analyze the fault reasons, get the solutions. If fault still can't be solved, please ask for service, contact with agents or directly to FRECON

Operator Panel Displays	Fault Name	Fault Reasons	Troubleshooting
Err01	Acceleration Over-current	1、Inverter output circuit grounding or shorted 2、Acceleration time is too short 3、Manually boost the torque or V/F curve unsuitable 4、Voltage is too low 5、Start the rotating motor 6、Shock load on acceleration 7、Inverter selection is too small	1、Peripheral troubleshooting 2、Prolong the acceleration time 3、Adjust the V/F curve Or manually-torque-boost 4、The voltage adjusted to a normal range 5、Select start on rotational-speed tracking or waiting for motor stopped 6、Cancel shock-load 7、Select inverter with a larger power
Err02	Deceleration Over-current	1、Inverter output circuit grounding or shorted 2、Deceleration time is too short 3、Voltage is too low 4、Shock load on deceleration 5、No installation of braking resistor	1、Peripheral troubleshooting 2、Prolong the deceleration time 3、The voltage adjusted to a normal range 4、Cancel shock-load 5、Install braking resistor
Err03	Constant-speed Over-current	1、Inverter output circuit grounding or shorted 2、Voltage is too low 3、If there is shock-load during running 4、Inverter selection is too small	1、Peripheral troubleshooting 2、The voltage adjusted to a normal range 3、Cancel shock-load 4、Select inverter with a larger power
Err04	Acceleration Overvoltage	1、Input voltage is high 2、There is an external force during acceleration dragging the motor to work 3、Acceleration time is too short 4、No installation of braking resistor	1、The voltage adjusted to a normal range 2、Cancel the external power or install braking resistor 3、Prolong the acceleration time 4、Install braking resistor
Err05	Deceleration Overvoltage	1、Input voltage is high 2、There is an external force during deceleration dragging the motor to work	1、The voltage adjusted to a normal range 2、Cancel the external power or install braking

		3、Deceleration time is too short 4、No installation of braking resistor	resistor 3、Prolong the deceleration time 4、Install braking resistor
Err06	Constant-speed Overvoltage	1、Input voltage is too high 2、There is an external force during running dragging the motor to work	1、The voltage adjusted to a normal range 2、Cancel the external power or install braking resistor
Err07	Bus Under voltage protection	1、Momentary power failure 2、The inverter input voltage 3、Bus voltage abnormal 4、Rectifier bridge and buffer resistance are abnormal 5、Drive board abnormal 6、Control panel abnormal	1、Reset Failure 2、Adjust voltage to normal range 3、Ask for technical support 4、Ask for technical support 5、Ask for technical support 6、Ask for technical support
Err08	Short circuit protection	1、Inverter output circuit shorted 2、Acceleration/ Deceleration time is too short 3、Wirings between motor and inverter is too long 4、Module Overheating 5、Internal wirings of inverter loosened 6、Main Board Abnormal 7、Drive Board Abnormal 8、Inverter Module Abnormal	1、Peripheral troubleshooting 2、Prolong the acceleration/deceleration time 3、Install the reactor or output-filter 4、Check and confirm the air-channel unblocked, fans operation normal 5、All cables plugged 6、Ask for technical support 7、Ask for technical support 8、Ask for technical support
Err09	Input Open-phase	1、Power of three-phase-input is abnormal 2、Drive board abnormal 3、Lightning board abnormal 4、Main board abnormal	1、Check and solve the problems in peripheral wirings 2、Ask for technical support 3、Ask for technical support 4、Ask for technical support
Err10	Output Open-phase	Lead-wire from inverter to motor is abnormal Three-phase output of inverter is unbalanced during motor-running 3、Drive board abnormal 4、Inverter Module Abnormal	1、Peripheral troubleshooting 2、Check and confirm the motor three-phase winding to be normal 3、Ask for technical support 4、Ask for technical support
Err11	Motor Overload	1、Motor-protection parameters F11.17 set incorrectly 2、Load is too large or motor rocked rotor 3、Inverter selection is too small	1、Setting the parameters correctly 2、Lowering the load and check the conditions of motor and mechanical 3、Select inverter with a larger power
Err12	Inverter Overload	1、Load is too large or motor rocked rotor 2、Inverter selection is too small	1、Reduce load and check the conditions of motor and mechanical 2、Select inverter with a

			larger power
Err13	Fault protection of external input	1、Input the external fault signal by multi-function terminal	1、Reset to run
Err14	Overheat	1、Ambient temperature is too high 2、Air-channel blocked 3、Fans damaged 4、Module thermistors damaged 5、Inverter module damaged	1、Lowering the ambient temperature 2、Clean up the air-channel 3、Replace the fans 4、Replace the thermistors 5、Replace the inverter module
Err15	Memory Failure	1、EEPROM Chips damage	1、Replace the Main Board
Err16	Cancel the self-identification	1、Press the button of STOP/RST during self-identification	1、Press STOP/RST for restoration
Err17	Self-identification failure	1、Motor and the inverter output terminals are not connected 2、Motor connects to load 3、Motor Failure	1、Check the wirings between inverter and motor 2、Motor breaks away from load 3、Check motor
Err18	485 Communication Timeout	Upper computer works abnormally 2、Communication cable is abnormal 3、F15 communication parameters set incorrectly	1、Check the wirings of upper computer 2、Check the communication cable 3、Set the communication parameters correctly
Err19	PID feedback disconnection on running	1、PID feedback lower than the value set by F13.24	1、Check the PID feedback signal or set F13.24 to be a suitable value
Err20	The running time arrives	1、Setting the function of running time arrives	1、Refer to description of F05.14
Err21	Parameter Upload Error	1、Copy card uninstalled or plugged unsuitable 2、Parameters copy card abnormal 3、Control board abnormal	1、Parameter copy card installed correctly 2、Ask for technical support 3、Ask for technical support
Err22	Parameter Download Error	1、Copy card uninstalled or plugged unsuitable 2、Parameters copy card abnormal 3、Control board abnormal	1、Parameter copy card installed correctly 2、Ask for technical support 3、Ask for technical support
Err23	Braking Unit failure	1、Braking wirings fault or braking tube damaged 2、Value of external braking resister is too small	1.Check the brake unit, and replace the new brake tube 2. Increasing the braking resistor
Err24	Disconnection Fault of temperature sensor	1、Temperature sensor failure or cable break	1、Ask for technical support
Err25	Inverter loss-load	1、Running current of inverter is less than F11.22	1、Confirm whether the load loss or parameters of F11.22、F11.23 conform to the actual running conditions.
Err26	With-wave	1、Load is too large or motor	1、Reduce the load or

	current limit fault	rocked-rotor 2、Inverter selection is too small	check the conditions of motor or mechanical 2、Select the inverter with larger power
Err27	Soft-start relay unclosed	1、Grid voltage is too low 2、Rectifier module failure	1、Check the grid voltage 2、Ask for technical support
Err28	EEPROM Version Incompatible	1、Parameter version of up/download module is inconsistent with the one of control panel	1、Re-upload parameters to up/download modules
Err29	Hardware detect Overcurrent	1、Acceleration/Deceleration time is too short 2、Motor Parameters is Inaccurate 3、Hardware failure of Inverter	1、Prolong the acceleration/deceleration time 2、Setting the correct motor parameter 3、Ask for technical support
Err30	Hardware detect overvoltage	1、Deceleration time is too short 2、No installation of braking resistors 3、Hardware failure of Inverter	1、Prolong the deceleration time 2、Install the braking resistor 3、Ask for technical support
Err32	Hydraulic Probe Failure	Hydraulic Probe Failure	Hydraulic Probe Changed
Arn33	Pre-warning of Weak Light	Output frequency lower than or equal with lower limit of PI output frequency, and continues this status until arrives at delay time of weak light.	Check the lower limit of PI output frequency and weak-light delay theset value
Arn34	Pre-warning of Full-water	Water-lever feedback lower than the set threshold, and continue to the delay time	Check the pre-warning point of water level